# DATA SHEET

## 8XC52/54/58/80C32
## 8XC51FA/FB/FC/80C51FA
## 8XC51RA+/RB+/RC+/RD+/80C51RA +

80C51 8-bit microcontroller family

8K–64K/256–1K OTP/ROM/ROMless,
low voltage (2.7V–5.5V), low power, high speed (33 MHz)

Product specification
Supersedes data of 1998 Jun 04
IC20 Data Handbook

1999 Apr 01

Philips
Semiconductors

PHILIPS

## DESCRIPTION

Three different Single-Chip 8-Bit Microcontroller families are presented in this datasheet:

- 80C32/8XC52/8XC54/8XC58
- 80C51FA/8XC51FA/8XC51FB/8XC51FC
- 80C51RA+/8XC51RA+/8XC51RB+/8XC51RC+/8XC51RD+

For applications requiring 4K ROM/EPROM, see the 8XC51/80C31 8-bit CMOS (low voltage, low power, and high speed) microcontroller families datasheet.

All the families are Single-Chip 8-Bit Microcontrollers manufactured in advanced CMOS process and are derivatives of the 80C51 microcontroller family. All the devices have the same instruction set as the 80C51.

These devices provide architectural enhancements that make them applicable in a variety of applications for general control systems.

| ROM/EPROM Memory Size (X by 8) | RAM Size (X by 8) | Programmable Timer Counter (PCA) | Hardware Watch Dog Timer |
|---|---|---|---|
| **80C31/8XC51** | | | |
| 0K/4K | 128 | No | No |
| **80C32/8XC52/54/58** | | | |
| 0K/8K/16K/32K | 256 | No | No |
| **80C51FA/8XC51FA/FB/FC** | | | |
| 0K/8K/16K/32K | 256 | Yes | No |
| **80C51RA+/8XC51RA+/RB+/RC+** | | | |
| 0K/8K/16K/32K | 512 | Yes | Yes |
| **8XC51RD+** | | | |
| 64K | 1024 | Yes | Yes |

The ROMless devices, 80C32, 80C51FA, and 80C51RA+ can address up to 64K of external memory. All the devices have four 8-bit I/O ports, three 16-bit timer/event counters, a multi-source, four-priority-level, nested interrupt structure, an enhanced UART and on-chip oscillator and timing circuits. For systems that require extra memory capability up to 64k bytes, each can be expanded using standard TTL-compatible memories and logic.

Its added features make it an even more powerful microcontroller for applications that require pulse width modulation, high-speed I/O and up/down counting capabilities such as motor control. It also has a more versatile serial channel that facilitates multiprocessor communications.

## FEATURES

- 80C51 Central Processing Unit
- Speed up to 33MHz
- Full static operation
- Operating voltage range: 2.7V to 5.5V @ 16MHz
- Security bits:
  - ROM – 2 bits
  - OTP–EPROM – 3 bits
- Encryption array – 64 bytes
- RAM expandable to 64K bytes
- 4 level priority interrupt
- 6 or7 interrupt sources, depending on device
- Four 8-bit I/O ports
- Full-duplex enhanced UART
  - Framing error detection
  - Automatic address recognition
- Power control modes
  - Clock can be stopped and resumed
  - Idle mode
  - Power down mode
- Programmable clock out
- Second DPTR register
- Asynchronous port reset
- Low EMI (inhibit ALE)

## BLOCK DIAGRAM

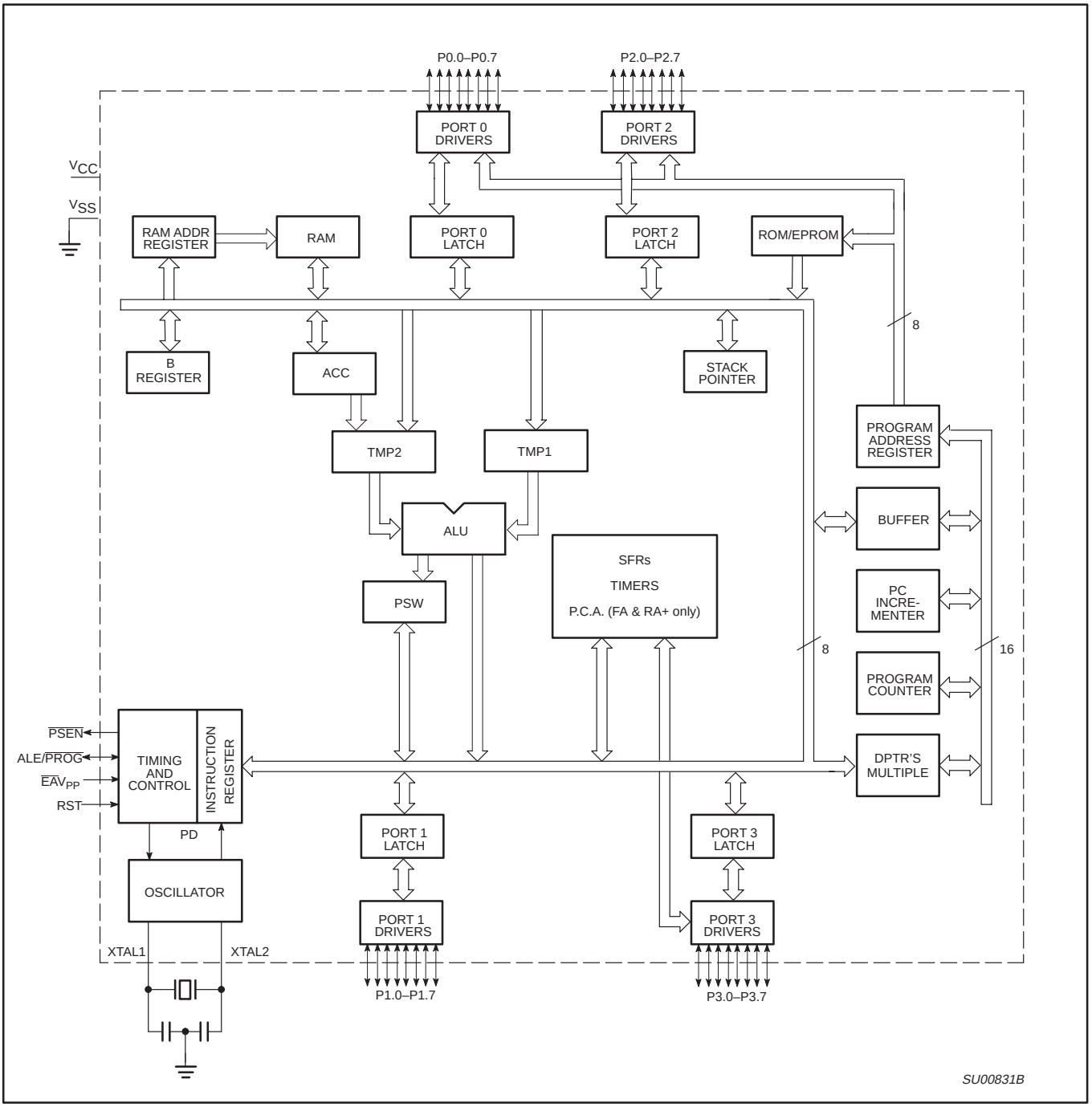

## LOGIC SYMBOL

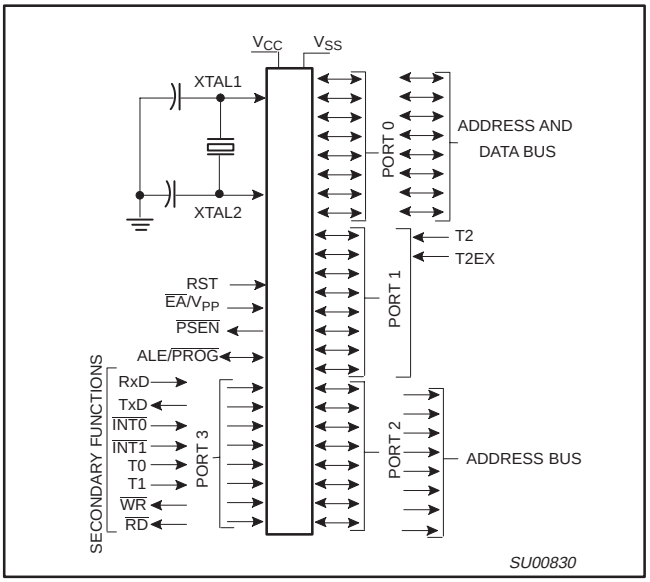


## PIN CONFIGURATIONS

## DUAL IN-LINE PACKAGE PIN FUNCTIONS

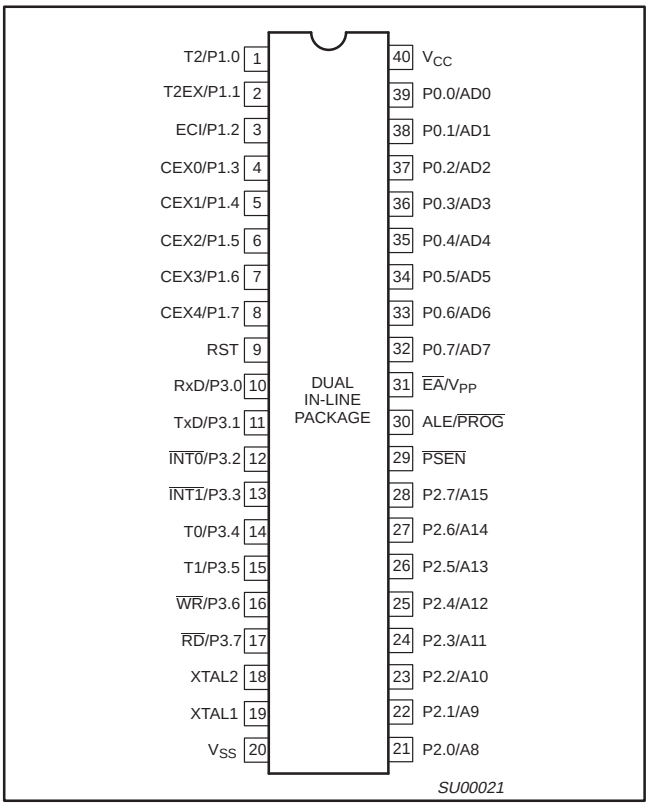


## PLASTIC LEADED CHIP CARRIER PIN FUNCTIONS

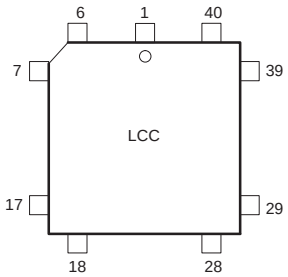


| Pin | Function | Pin | Function | Pin | Function |
|---|---|---|---|---|---|
| 1 | NIC* | 16 | P3.4/T0 | 31 | P2.7/A15 |
| 2 | P1.0/T2 | 17 | P3.5/T1 | 32 | PSEN |
| 3 | P1.1/T2EX | 18 | P3.6/WR | 33 | ALE/PROG |
| 4 | P1.2/ECI | 19 | P3.7/RD | 34 | NIC* |
| 5 | P1.3/CEX0 | 20 | XTAL2 | 35 | EA/VPP |
| 6 | P1.4/CEX1 | 21 | XTAL1 | 36 | P0.7/AD7 |
| 7 | P1.5/CEX2 | 22 | VSS | 37 | P0.6/AD6 |
| 8 | P1.6/CEX3 | 23 | NIC* | 38 | P0.5/AD5 |
| 9 | P1.7/CEX4 | 24 | P2.0/A8 | 39 | P0.4/AD4 |
| 10 | RST | 25 | P2.1/A9 | 40 | P0.3/AD3 |
| 11 | P3.0/RxD | 26 | P2.2/A10 | 41 | P0.2/AD2 |
| 12 | NIC* | 27 | P2.3/A11 | 42 | P0.1/AD1 |
| 13 | P3.1/TxD | 28 | P2.4/A12 | 43 | P0.0/AD0 |
| 14 | P3.2/INT0 | 29 | P2.5/A13 | 44 | VCC |
| 15 | P3.3/INT1 | 30 | P2.6/A14 | | |

* NO INTERNAL CONNECTION

SU00023

## PLASTIC QUAD FLAT PACK PIN FUNCTIONS

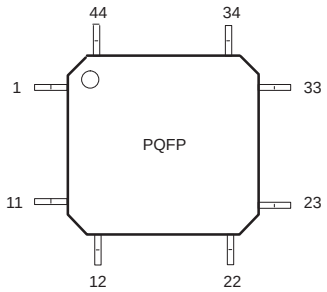


| Pin | Function | Pin | Function | Pin | Function |
|---|---|---|---|---|---|
| 1 | P1.5/CEX2 | 16 | VSS | 31 | P0.6/AD6 |
| 2 | P1.6/CEX3 | 17 | NIC* | 32 | P0.5/AD5 |
| 3 | P1.7/CEX4 | 18 | P2.0/A8 | 33 | P0.4/AD4 |
| 4 | RST | 19 | P2.1/A9 | 34 | P0.3/AD3 |
| 5 | P3.0/RxD | 20 | P2.2/A10 | 35 | P0.2/AD2 |
| 6 | NIC* | 21 | P2.3/A11 | 36 | P0.1/AD1 |
| 7 | P3.1/TxD | 22 | P2.4/A12 | 37 | P0.0/AD0 |
| 8 | P3.2/INT0 | 23 | P2.5/A13 | 38 | VCC |
| 9 | P3.3/INT1 | 24 | P2.6/A14 | 39 | NIC* |
| 10 | P3.4/T0 | 25 | P2.7/A15 | 40 | P1.0/T2 |
| 11 | P3.5/T1 | 26 | PSEN | 41 | P1.1/T2EX |
| 12 | P3.6/WR | 27 | ALE/PROG | 42 | P1.2/ECI |
| 13 | P3.7/RD | 28 | NIC* | 43 | P1.3/CEX0 |
| 14 | XTAL2 | 29 | EA/VPP | 44 | P1.4/CEX1 |
| 15 | XTAL1 | 30 | P0.7/AD7 | | |

* NO INTERNAL CONNECTION

SU00024

## PIN DESCRIPTIONS

| MNEMONIC | PIN NUMBER DIP | PIN NUMBER LCC | PIN NUMBER QFP | TYPE | NAME AND FUNCTION |
|---|---|---|---|---|---|
| $V_{SS}$ | 20 | 22 | 16 | I | **Ground:** 0V reference. |
| $V_{CC}$ | 40 | 44 | 38 | I | **Power Supply:** This is the power supply voltage for normal, idle, and power-down operation. |
| P0.0–0.7 | 39–32 | 43–36 | 37–30 | I/O | **Port 0:** Port 0 is an open-drain, bidirectional I/O port. Port 0 pins that have 1s written to them float and can be used as high-impedance inputs. Port 0 is also the multiplexed low-order address and data bus during accesses to external program and data memory. In this application, it uses strong internal pull-ups when emitting 1s. Port 0 also outputs the code bytes during program verification and received code bytes during EPROM programming. External pull-ups are required during program verification. |
| P1.0–P1.7 | 1–8 | 2–9 | 40–44, 1–3 | I/O | **Port 1:** Port 1 is an 8-bit bidirectional I/O port with internal pull-ups. Port 1 pins that have 1s written to them are pulled high by the internal pull-ups and can be used as inputs. As inputs, port 1 pins that are externally pulled low will source current because of the internal pull-ups. (See DC Electrical Characteristics: $I_{IL}$). Port 1 also receives the low-order address byte during program memory verification. |
| | | | | | Alternate functions for 8XC51FX and 8XC51RX+ Port 1 include: |
| | 1 | 2 | 40 | I/O | **T2 (P1.0):** Timer/Counter 2 external count input/Clockout (see Programmable Clock-Out) |
| | 2 | 3 | 41 | I | **T2EX (P1.1):** Timer/Counter 2 Reload/Capture/Direction Control |
| | 3 | 4 | 42 | I | **ECI (P1.2):** External Clock Input to the PCA |
| | 4 | 5 | 43 | I/O | **CEX0 (P1.3):** Capture/Compare External I/O for PCA module 0 |
| | 5 | 6 | 44 | I/O | **CEX1 (P1.4):** Capture/Compare External I/O for PCA module 1 |
| | 6 | 7 | 1 | I/O | **CEX2 (P1.5):** Capture/Compare External I/O for PCA module 2 |
| | 7 | 8 | 2 | I/O | **CEX3 (P1.6):** Capture/Compare External I/O for PCA module 3 |
| | 8 | 9 | 3 | I/O | **CEX4 (P1.7):** Capture/Compare External I/O for PCA module 4 |
| P2.0–P2.7 | 21–28 | 24–31 | 18–25 | I/O | **Port 2:** Port 2 is an 8-bit bidirectional I/O port with internal pull-ups. Port 2 pins that have 1s written to them are pulled high by the internal pull-ups and can be used as inputs. As inputs, port 2 pins that are externally being pulled low will source current because of the internal pull-ups. (See DC Electrical Characteristics: $I_{IL}$). Port 2 emits the high-order address byte during fetches from external program memory and during accesses to external data memory that use 16-bit addresses (MOVX @DPTR). In this application, it uses strong internal pull-ups when emitting 1s. During accesses to external data memory that use 8-bit addresses (MOV @Ri), port 2 emits the contents of the P2 special function register. Some Port 2 pins receive the high order address bits during EPROM programming and verification. |
| P3.0–P3.7 | 10–17 | 11, 13–19 | 5, 7–13 | I/O | **Port 3:** Port 3 is an 8-bit bidirectional I/O port with internal pull-ups. Port 3 pins that have 1s written to them are pulled high by the internal pull-ups and can be used as inputs. As inputs, port 3 pins that are externally being pulled low will source current because of the pull-ups. (See DC Electrical Characteristics: $I_{IL}$). Port 3 also serves the special features of the 80C51 family, as listed below: |
| | 10 | 11 | 5 | I | **RxD (P3.0):** Serial input port |
| | 11 | 13 | 7 | O | **TxD (P3.1):** Serial output port |
| | 12 | 14 | 8 | I | **$\overline{\text{INT0}}$ (P3.2):** External interrupt |
| | 13 | 15 | 9 | I | **$\overline{\text{INT1}}$ (P3.3):** External interrupt |
| | 14 | 16 | 10 | I | **T0 (P3.4):** Timer 0 external input |
| | 15 | 17 | 11 | I | **T1 (P3.5):** Timer 1 external input |
| | 16 | 18 | 12 | O | **$\overline{\text{WR}}$ (P3.6):** External data memory write strobe |
| | 17 | 19 | 13 | O | **$\overline{\text{RD}}$ (P3.7):** External data memory read strobe |
| RST | 9 | 10 | 4 | I | **Reset:** A high on this pin for two machine cycles while the oscillator is running, resets the device. An internal diffused resistor to $V_{SS}$ permits a power-on reset using only an external capacitor to $V_{CC}$. |
| ALE/$\overline{\text{PROG}}$ | 30 | 33 | 27 | O | **Address Latch Enable/Program Pulse:** Output pulse for latching the low byte of the address during an access to external memory. In normal operation, ALE is emitted at a constant rate of 1/6 the oscillator frequency, and can be used for external timing or clocking. Note that one ALE pulse is skipped during each access to external data memory. This pin is also the program pulse input ($\overline{\text{PROG}}$) during EPROM programming. ALE can be disabled by setting SFR auxiliary.0. With this bit set, ALE will be active only during a MOVX instruction. |

## PIN DESCRIPTIONS (Continued)

| MNEMONIC | PIN NUMBER DIP | LCC | QFP | TYPE | NAME AND FUNCTION |
|---|---|---|---|---|---|
| $\overline{PSEN}$ | 29 | 32 | 26 | O | **Program Store Enable:** The read strobe to external program memory. When executing code from the external program memory, $\overline{PSEN}$ is activated twice each machine cycle, except that two $\overline{PSEN}$ activations are skipped during each access to external data memory. $\overline{PSEN}$ is not activated during fetches from internal program memory. |
| $\overline{EA}/V_{PP}$ | 31 | 35 | 29 | I | **External Access Enable/Programming Supply Voltage:** $\overline{EA}$ must be externally held low to enable the device to fetch code from external program memory locations starting with 0000H. If $\overline{EA}$ is held high, the device executes from internal program memory unless the program counter contains an address greater than 8k Devices (IFFFH), 16k Devices (3FFFH) or 32k Devices (7FFFH). Since the RD+ has 64k Internal Memory, the RD+ will execute only from internal memory when $\overline{EA}$ is held high. This pin also receives the 12.75V programming supply voltage ($V_{PP}$) during EPROM programming. If security bit 1 is programmed, $\overline{EA}$ will be internally latched on Reset. |
| XTAL1 | 19 | 21 | 15 | I | **Crystal 1:** Input to the inverting oscillator amplifier and input to the internal clock generator circuits. |
| XTAL2 | 18 | 20 | 14 | O | **Crystal 2:** Output from the inverting oscillator amplifier. |

**NOTE:**
To avoid “latch-up” effect at power-on, the voltage on any pin at any time must not be higher than $V_{CC}$ + 0.5V or $V_{SS}$ – 0.5V, respectively.

## 8XC52/54/58 AND 80C32 ORDERING INFORMATION

| | MEMORY SIZE 8K × 8 | MEMORY SIZE 16K × 8 | MEMORY SIZE 32K × 8 | ROMless | TEMPERATURE RANGE °C AND PACKAGE | VOLTAGE RANGE | FREQ. (MHz) | DWG. # |
|---|---|---|---|---|---|---|---|---|
| ROM | P80C52SBPN | P80C54SBPN | P80C58SBPN | P80C32SBPN | 0 to +70, Plastic Dual In-line Package | 2.7V to 5.5V | 0 to 16 | SOT129-1 |
| OTP | P87C52SBPN | P87C54SBPN | P87C58SBPN | | | | | |
| ROM | P80C52SBAA | P80C54SBAA | P80C58SBAA | P80C32SBAA | 0 to +70, Plastic Leaded Chip Carrier | 2.7V to 5.5V | 0 to 16 | SOT187-2 |
| OTP | P87C52SBAA | P87C54SBAA | P87C58SBAA | | | | | |
| ROM | P80C52SBBB | P80C54SBBB | P80C58SBBB | P80C32SBBB | 0 to +70, Plastic Quad Flat Pack | 2.7V to 5.5V | 0 to 16 | SOT307-2 |
| OTP | P87C52SBBB | P87C54SBBB | P87C58SBBB | | | | | |
| ROM | P80C52SFPN | P80C54SFPN | P80C58SFPN | P80C32SFPN | –40 to +85, Plastic Dual In-line Package | 2.7V to 5.5V | 0 to 16 | SOT129-1 |
| OTP | P87C52SFPN | P87C54SFPN | P87C58SFPN | | | | | |
| ROM | P80C52SFAA | P80C54SFAA | P80C58SFAA | P80C32SFAA | –40 to +85, Plastic Leaded Chip Carrier | 2.7V to 5.5V | 0 to 16 | SOT187-2 |
| OTP | P87C52SFAA | P87C54SFAA | P87C58SFAA | | | | | |
| ROM | P80C52SFBB | P80C54SFBB | P80C58SFBB | P80C32SFBB | –40 to +85, Plastic Quad Flat Pack | 2.7V to 5.5V | 0 to 16 | SOT307-2 |
| OTP | P87C52SFBB | P87C54SFBB | P87C58SFBB | | | | | |
| ROM | P80C52UBAA | P80C54UBAA | P80C58UBAA | P80C32UBAA | 0 to +70, Plastic Leaded Chip Carrier | 5V | 0 to 33 | SOT187-2 |
| OTP | P87C52UBAA | P87C54UBAA | P87C58UBAA | | | | | |
| ROM | P80C52UBPN | P80C54UBPN | P80C58UBPN | P80C32UBPN | 0 to +70, Plastic Dual In-line Package | 5V | 0 to 33 | SOT129-1 |
| OTP | P87C52UBPN | P87C54UBPN | P87C58UBPN | | | | | |
| ROM | P80C52UBBB | P80C54UBBB | P80C58UBBB | P80C32UBBB | 0 to +70, Plastic Quad Flat Pack | 5V | 0 to 33 | SOT307-2 |
| OTP | P87C52UBBB | P87C54UBBB | P87C58UBBB | | | | | |
| ROM | P80C52UFAA | P80C54UFAA | P80C58UFAA | P80C32UFAA | –40 to +85, Plastic Leaded Chip Carrier | 5V | 0 to 33 | SOT187-2 |
| OTP | P87C52UFAA | P87C54UFAA | P87C58UFAA | | | | | |
| ROM | P80C52UFPN | P80C54UFPN | P80C58UFPN | P80C32UFPN | –40 to +85, Plastic Dual In-line Package | 5V | 0 to 33 | SOT129-1 |
| OTP | P87C52UFPN | P87C54UFPN | P87C58UFPN | | | | | |
| ROM | P80C52UFBB | P80C54UFBB | P80C58UFBB | P80C32UFBB | –40 to +85, Plastic Quad Flat Pack | 5V | 0 to 33 | SOT307-2 |
| OTP | P87C52UFBB | P87C54UFBB | P87C58UFBB | | | | | |

Note: For Multi Time Programmable devices, See P89C51RX+ Flash datasheet.

## 8XC51FA/FB/FC AND 80C51FA ORDERING INFORMATION

| | MEMORY SIZE 8K × 8 | MEMORY SIZE 16K × 8 | MEMORY SIZE 32K × 8 | ROMless | TEMPERATURE RANGE °C AND PACKAGE | VOLTAGE RANGE | FREQ. (MHz) | DWG. # |
|---|---|---|---|---|---|---|---|---|
| ROM | P83C51FA–4N | P83C51FB–4N | P83C51FC–4N | P80C51FA–4N | 0 to +70, 40-Pin Plastic Dual In-line Pkg. | 2.7V to 5.5V | 0 to 16 | SOT129-1 |
| OTP | P87C51FA–4N | P87C51FB–4N | P87C51FC–4N | | | | | |
| ROM | P83C51FA–4A | P83C51FB–4A | P83C51FC–4A | P80C51FA–4A | 0 to +70, 44-Pin Plastic Leaded Chip Carrier | 2.7V to 5.5V | 0 to 16 | SOT187-2 |
| OTP | P87C51FA–4A | P87C51FB–4A | P87C51FC–4A | | | | | |
| ROM | P83C51FA–4B | P83C51FB–4B | P83C51FC–4B | P80C51FA–4B | 0 to +70, 44-Pin Plastic Quad Flat Pack | 2.7V to 5.5V | 0 to 16 | SOT307-2 |
| OTP | P87C51FA–4B | P87C51FB–4B | P87C51FC–4B | | | | | |
| ROM | P83C51FA–5N | P83C51FB–5N | P83C51FC–5N | P80C51FA–5N | –40 to +85, 40-Pin Plastic Dual In-line Pkg. | 2.7V to 5.5V | 0 to 16 | SOT129-1 |
| OTP | P87C51FA–5N | P87C51FB–5N | P87C51FC–5N | | | | | |
| ROM | P83C51FA–5A | P83C51FB–5A | P83C51FC–5A | P80C51FA–5A | –40 to +85, 44-Pin Plastic Leaded Chip Carrier | 2.7V to 5.5V | 0 to 16 | SOT187-2 |
| OTP | P87C51FA–5A | P87C51FB–5A | P87C51FC–5A | | | | | |
| ROM | P83C51FA–5B | P83C51FB–5B | P83C51FC–5B | P80C51FA–5B | –40 to +85, 44-Pin Plastic Quad Flat Pack | 2.7V to 5.5V | 0 to 16 | SOT307-2 |
| OTP | P87C51FA–5B | P87C51FB–5B | P87C51FC–5B | | | | | |
| ROM | P83C51FA–IN | P83C51FB–IN | P83C51FC–IN | P80C51FA–IN | 0 to +70, 40-Pin Plastic Dual In-line Pkg. | 5V | 0 to 33 | SOT129-1 |
| OTP | P87C51FA–IN | P87C51FB–IN | P87C51FC–IN | | | | | |
| ROM | P83C51FA–IA | P83C51FB–IA | P83C51FC–IA | P80C51FA–IA | 0 to +70, 44-Pin Plastic Leaded Chip Carrier | 5V | 0 to 33 | SOT187-2 |
| OTP | P87C51FA–IA | P87C51FB–IA | P87C51FC–IA | | | | | |
| ROM | P83C51FA–IB | P83C51FB–IB | P83C51FC–IB | P80C51FA–IB | 0 to +70, 44-Pin Plastic Quad Flat Pack | 5V | 0 to 33 | SOT307-2 |
| OTP | P87C51FA–IB | P87C51FB–IB | P87C51FC–IB | | | | | |
| ROM | P83C51FA–JN | P83C51FB–JN | P83C51FC–JN | P80C51FA–JN | –40 to +85, 40-Pin Plastic Dual In-line Pkg. | 5V | 0 to 33 | SOT129-1 |
| OTP | P87C51FA–JN | P87C51FB–JN | P87C51FC–JN | | | | | |
| ROM | P83C51FA–JA | P83C51FB–JA | P83C51FC–JA | P80C51FA–JA | –40 to +85, 44-Pin Plastic Leaded Chip Carrier | 5V | 0 to 33 | SOT187-2 |
| OTP | P87C51FA–JA | P87C51FB–JA | P87C51FC–JA | | | | | |
| ROM | P83C51FA–JB | P83C51FB–JB | P83C51FC–JB | P80C51FA–JB | –40 to +85, 44-Pin Plastic Quad Flat Pack | 5V | 0 to 33 | SOT307-2 |
| OTP | P87C51FA–JB | P87C51FB–JB | P87C51FC–JB | | | | | |

Note: For Multi Time Programmable devices, See P89C51RX+ Flash datasheet.

## 87C51RA+/RB+/RC+/RD+ AND 80C51RA+ ORDERING INFORMATION

| | MEMORY SIZE 8K × 8 | MEMORY SIZE 16K × 8 | MEMORY SIZE 32K × 8 | MEMORY SIZE 64K × 8 | ROMless | TEMPERATURE RANGE °C AND PACKAGE | VOLTAGE RANGE | FREQ. (MHz) | DWG. # |
|---|---|---|---|---|---|---|---|---|---|
| ROM | P83C51RA+4N | P83C51RB+4N | P83C51RC+4N | P83C51RD+4N | P80C51RA+4N | 0 to +70, 40-Pin Plastic Dual In-line Pkg. | 2.7V to 5.5V | 0 to 16 | SOT129-1 |
| OTP | P87C51RA+4N | P87C51RB+4N | P87C51RC+4N | P87C51RD+4N | | | | | |
| ROM | P83C51RA+4A | P83C51RB+4A | P83C51RC+4A | P83C51RD+4A | P80C51RA+4A | 0 to +70, 44-Pin Plastic Leaded Chip Carrier | 2.7V to 5.5V | 0 to 16 | SOT187-2 |
| OTP | P87C51RA+4A | P87C51RB+4A | P87C51RC+4A | P87C51RD+4A | | | | | |
| ROM | P83C51RA+4B | P83C51RB+4B | P83C51RC+4B | P83C51RD+4B | P80C51RA+4B | 0 to +70, 44-Pin Plastic Quad Flat Pack | 2.7V to 5.5V | 0 to 16 | SOT307-2 |
| OTP | P87C51RA+4B | P87C51RB+4B | P87C51RC+4B | P87C51RD+4B | | | | | |
| ROM | P83C51RA+5N | P83C51RB+5N | P83C51RC+5N | P83C51RD+5N | P80C51RA+5N | –40 to +85, 40-Pin Plastic Dual In-line Pkg. | 2.7V to 5.5V | 0 to 16 | SOT129-1 |
| OTP | P87C51RA+5N | P87C51RB+5N | P87C51RC+5N | P87C51RD+5N | | | | | |
| ROM | P83C51RA+5A | P83C51RB+5A | P83C51RC+5A | P83C51RD+5A | P80C51RA+5A | –40 to +85, 44-Pin Plastic Leaded Chip Carrier | 2.7V to 5.5V | 0 to 16 | SOT187-2 |
| OTP | P87C51RA+5A | P87C51RB+5A | P87C51RC+5A | P87C51RD+5A | | | | | |
| ROM | P83C51RA+5B | P83C51RB+5B | P83C51RC+5B | P83C51RD+5B | P80C51RA+5B | –40 to +85, 44-Pin Plastic Quad Flat Pack | 2.7V to 5.5V | 0 to 16 | SOT307-2 |
| OTP | P87C51RA+5B | P87C51RB+5B | P87C51RC+5B | P87C51RD+5B | | | | | |
| ROM | P83C51RA+IN | P83C51RB+IN | P83C51RC+IN | P83C51RD+IN | P80C51RA+IN | 0 to +70, 40-Pin Plastic Dual In-line Pkg. | 5V | 0 to 33 | SOT129-1 |
| OTP | P87C51RA+IN | P87C51RB+IN | P87C51RC+IN | P87C51RD+IN | | | | | |
| ROM | P83C51RA+IA | P83C51RB+IA | P83C51RC+IA | P83C51RD+IA | P80C51RA+IA | 0 to +70, 44-Pin Plastic Leaded Chip Carrier | 5V | 0 to 33 | SOT187-2 |
| OTP | P87C51RA+IA | P87C51RB+IA | P87C51RC+IA | P87C51RD+IA | | | | | |
| ROM | P83C51RA+IB | P83C51RB+IB | P83C51RC+IB | P83C51RD+IB | P80C51RA+IB | 0 to +70, 44-Pin Plastic Quad Flat Pack | 5V | 0 to 33 | SOT307-2 |
| OTP | P87C51RA+IB | P87C51RB+IB | P87C51RC+IB | P87C51RD+IB | | | | | |
| ROM | P83C51RA+JN | P83C51RB+JN | P83C51RC+JN | P83C51RD+JN | P80C51RA+JN | –40 to +85, 40-Pin Plastic Dual In-line Pkg. | 5V | 0 to 33 | SOT129-1 |
| OTP | P87C51RA+JN | P87C51RB+JN | P87C51RC+JN | P87C51RD+JN | | | | | |
| ROM | P83C51RA+JA | P83C51RB+JA | P83C51RC+JA | P83C51RD+JA | P80C51RA+JA | –40 to +85, 44-Pin Plastic Leaded Chip Carrier | 5V | 0 to 33 | SOT187-2 |
| OTP | P87C51RA+JA | P87C51RB+JA | P87C51RC+JA | P87C51RD+JA | | | | | |
| ROM | P83C51RA+JB | P83C51RB+JB | P83C51RC+JB | P83C51RD+JB | P80C51RA+JB | –40 to +85, 44-Pin Plastic Quad Flat Pack | 5V | 0 to 33 | SOT307-2 |
| OTP | P87C51RA+JB | P87C51RB+JB | P87C51RC+JB | P87C51RD+JB | | | | | |

Note: For Multi Time Programmable devices, See P89C51RX+ Flash datasheet.

**Table 1. 8XC52/54/58/80C32 Special Function Registers**

| SYMBOL | DESCRIPTION | DIRECT ADDRESS | BIT ADDRESS, SYMBOL, OR ALTERNATIVE PORT FUNCTION MSB | | | | | | | LSB | RESET VALUE |
|---|---|---|---|---|---|---|---|---|---|---|---|
| ACC* | Accumulator | E0H | E7 | E6 | E5 | E4 | E3 | E2 | E1 | E0 | 00H |
| AUXR# | Auxiliary | 8EH | – | – | – | – | – | – | – | AO | xxxxxxx0B |
| AUXR1# | Auxiliary 1 | A2H | – | – | – | LPEP[3] | GF3 | 0 | – | DPS | xxx0xxx0B |
| B* | B register | F0H | F7 | F6 | F5 | F4 | F3 | F2 | F1 | F0 | 00H |
| DPTR: | Data Pointer (2 bytes) | | | | | | | | | | |
| DPH | Data Pointer High | 83H | | | | | | | | | 00H |
| DPL | Data Pointer Low | 82H | | | | | | | | | 00H |
| | | | AF | AE | AD | AC | AB | AA | A9 | A8 | |
| IE* | Interrupt Enable | A8H | EA | – | ET2 | ES | ET1 | EX1 | ET0 | EX0 | 0x000000B |
| | | | BF | BE | BD | BC | BB | BA | B9 | B8 | |
| IP* | Interrupt Priority | B8H | – | – | PT2 | PS | PT1 | PX1 | PT0 | PX0 | xx000000B |
| | | | B7 | B6 | B5 | B4 | B3 | B2 | B1 | B0 | |
| IPH# | Interrupt Priority High | B7H | – | – | PT2H | PSH | PT1H | PX1H | PT0H | PX0H | xx000000B |
| | | | 87 | 86 | 85 | 84 | 83 | 82 | 81 | 80 | |
| P0* | Port 0 | 80H | AD7 | AD6 | AD5 | AD4 | AD3 | AD2 | AD1 | AD0 | FFH |
| | | | 97 | 96 | 95 | 94 | 93 | 92 | 91 | 90 | |
| P1* | Port 1 | 90H | – | – | – | – | – | – | T2EX | T2 | FFH |
| | | | A7 | A6 | A5 | A4 | A3 | A2 | A1 | A0 | |
| P2* | Port 2 | A0H | AD15 | AD14 | AD13 | AD12 | AD11 | AD10 | AD9 | AD8 | FFH |
| | | | B7 | B6 | B5 | B4 | B3 | B2 | B1 | B0 | |
| P3* | Port 3 | B0H | $\overline{RD}$ | $\overline{WR}$ | T1 | T0 | $\overline{INT1}$ | $\overline{INT0}$ | TxD | RxD | FFH |
| | | | | | | | | | | | |
| PCON#[1] | Power Control | 87H | SMOD1 | SMOD0 | – | POF[2] | GF1 | GF0 | PD | IDL | 00xx0000B |
| | | | D7 | D6 | D5 | D4 | D3 | D2 | D1 | D0 | |
| PSW* | Program Status Word | D0H | CY | AC | F0 | RS1 | RS0 | OV | – | P | 000000x0B |
| RCAP2H# | Timer 2 Capture High | CBH | | | | | | | | | 00H |
| RCAP2L# | Timer 2 Capture Low | CAH | | | | | | | | | 00H |
| SADDR# | Slave Address | A9H | | | | | | | | | 00H |
| SADEN# | Slave Address Mask | B9H | | | | | | | | | 00H |
| SBUF | Serial Data Buffer | 99H | | | | | | | | | xxxxxxxxB |
| | | | 9F | 9E | 9D | 9C | 9B | 9A | 99 | 98 | |
| SCON* | Serial Control | 98H | SM0/FE | SM1 | SM2 | REN | TB8 | RB8 | TI | RI | 00H |
| SP | Stack Pointer | 81H | | | | | | | | | 07H |
| | | | 8F | 8E | 8D | 8C | 8B | 8A | 89 | 88 | |
| TCON* | Timer Control | 88H | TF1 | TR1 | TF0 | TR0 | IE1 | IT1 | IE0 | IT0 | 00H |
| | | | CF | CE | CD | CC | CB | CA | C9 | C8 | |
| T2CON* | Timer 2 Control | C8H | TF2 | EXF2 | RCLK | TCLK | EXEN2 | TR2 | C/$\overline{T2}$ | CP/$\overline{RL2}$ | 00H |
| T2MOD# | Timer 2 Mode Control | C9H | – | – | – | – | – | – | T2OE | DCEN | xxxxxx00B |
| TH0 | Timer High 0 | 8CH | | | | | | | | | 00H |
| TH1 | Timer High 1 | 8DH | | | | | | | | | 00H |
| TH2# | Timer High 2 | CDH | | | | | | | | | 00H |
| TL0 | Timer Low 0 | 8AH | | | | | | | | | 00H |
| TL1 | Timer Low 1 | 8BH | | | | | | | | | 00H |
| TL2# | Timer Low 2 | CCH | | | | | | | | | 00H |
| TMOD | Timer Mode | 89H | GATE | C/$\overline{T}$ | M1 | M0 | GATE | C/$\overline{T}$ | M1 | M0 | 00H |

* SFRs are bit addressable.
\# SFRs are modified from or added to the 80C51 SFRs.
– Reserved bits.
1. Reset value depends on reset source.
2. Bit will not be affected by Reset.
3. LPEP – Low Power OTP–EPROM only operation.

**Table 2. 8XC51FA/FB/FC, 8XC51RA+/RB+/RC+/RD+ Special Function Registers**

| SYMBOL | DESCRIPTION | DIRECT ADDRESS | BIT ADDRESS, SYMBOL, OR ALTERNATIVE PORT FUNCTION MSB | | | | | | | LSB | RESET VALUE |
|---|---|---|---|---|---|---|---|---|---|---|---|
| ACC* | Accumulator | E0H | E7 | E6 | E5 | E4 | E3 | E2 | E1 | E0 | 00H |
| AUXR# | Auxiliary | 8EH | – | – | – | – | – | – | EXTRAM (RX+ only) | AO | xxxxxx00B |
| AUXR1# | Auxiliary 1 | A2H | – | – | – | LPEP[3] | GF3 | 0 | – | DPS | xxx0xxx0B |
| B* | B register | F0H | F7 | F6 | F5 | F4 | F3 | F2 | F1 | F0 | 00H |
| CCAP0H# | Module 0 Capture High | FAH | | | | | | | | | xxxxxxxxB |
| CCAP1H# | Module 1 Capture High | FBH | | | | | | | | | xxxxxxxxB |
| CCAP2H# | Module 2 Capture High | FCH | | | | | | | | | xxxxxxxxB |
| CCAP3H# | Module 3 Capture High | FDH | | | | | | | | | xxxxxxxxB |
| CCAP4H# | Module 4 Capture High | FEH | | | | | | | | | xxxxxxxxB |
| CCAP0L# | Module 0 Capture Low | EAH | | | | | | | | | xxxxxxxxB |
| CCAP1L# | Module 1 Capture Low | EBH | | | | | | | | | xxxxxxxxB |
| CCAP2L# | Module 2 Capture Low | ECH | | | | | | | | | xxxxxxxxB |
| CCAP3L# | Module 3 Capture Low | EDH | | | | | | | | | xxxxxxxxB |
| CCAP4L# | Module 4 Capture Low | EEH | | | | | | | | | xxxxxxxxB |
| CCAPM0# | Module 0 Mode | DAH | – | ECOM | CAPP | CAPN | MAT | TOG | PWM | ECCF | x0000000B |
| CCAPM1# | Module 1 Mode | DBH | – | ECOM | CAPP | CAPN | MAT | TOG | PWM | ECCF | x0000000B |
| CCAPM2# | Module 2 Mode | DCH | – | ECOM | CAPP | CAPN | MAT | TOG | PWM | ECCF | x0000000B |
| CCAPM3# | Module 3 Mode | DDH | – | ECOM | CAPP | CAPN | MAT | TOG | PWM | ECCF | x0000000B |
| CCAPM4# | Module 4 Mode | DEH | – | ECOM | CAPP | CAPN | MAT | TOG | PWM | ECCF | x0000000B |
| | | | DF | DE | DD | DC | DB | DA | D9 | D8 | |
| CCON*# | PCA Counter Control | D8H | CF | CR | – | CCF4 | CCF3 | CCF2 | CCF1 | CCF0 | 00x00000B |
| CH# | PCA Counter High | F9H | | | | | | | | | 00H |
| CL# | PCA Counter Low | E9H | | | | | | | | | 00H |
| CMOD# | PCA Counter Mode | D9H | CIDL | WDTE | – | – | – | CPS1 | CPS0 | ECF | 00xxx000B |
| DPTR: | Data Pointer (2 bytes) | | | | | | | | | | |
| DPH | Data Pointer High | 83H | | | | | | | | | 00H |
| DPL | Data Pointer Low | 82H | | | | | | | | | 00H |
| | | | AF | AE | AD | AC | AB | AA | A9 | A8 | |
| IE* | Interrupt Enable | A8H | EA | EC | ET2 | ES | ET1 | EX1 | ET0 | EX0 | 00H |
| | | | BF | BE | BD | BC | BB | BA | B9 | B8 | |
| IP* | Interrupt Priority | B8H | – | PPC | PT2 | PS | PT1 | PX1 | PT0 | PX0 | x0000000B |
| | | | B7 | B6 | B5 | B4 | B3 | B2 | B1 | B0 | |
| IPH# | Interrupt Priority High | B7H | – | PPCH | PT2H | PSH | PT1H | PX1H | PT0H | PX0H | x0000000B |
| | | | 87 | 86 | 85 | 84 | 83 | 82 | 81 | 80 | |
| P0* | Port 0 | 80H | AD7 | AD6 | AD5 | AD4 | AD3 | AD2 | AD1 | AD0 | FFH |
| | | | 97 | 96 | 95 | 94 | 93 | 92 | 91 | 90 | |
| P1* | Port 1 | 90H | CEX4 | CEX3 | CEX2 | CEX1 | CEX0 | ECI | T2EX | T2 | FFH |
| | | | A7 | A6 | A5 | A4 | A3 | A2 | A1 | A0 | |
| P2* | Port 2 | A0H | AD15 | AD14 | AD13 | AD12 | AD11 | AD10 | AD9 | AD8 | FFH |
| | | | B7 | B6 | B5 | B4 | B3 | B2 | B1 | B0 | |
| P3* | Port 3 | B0H | $\overline{RD}$ | $\overline{WR}$ | T1 | T0 | $\overline{INT1}$ | $\overline{INT0}$ | TxD | RxD | FFH |
| PCON#[1] | Power Control | 87H | SMOD1 | SMOD0 | – | POF[2] | GF1 | GF0 | PD | IDL | 00xx0000B |

* SFRs are bit addressable.
\# SFRs are modified from or added to the 80C51 SFRs.
– Reserved bits.
1. Reset value depends on reset source.
2. Bit will not be affected by Reset.
3. LPEP – Low Power OTP–EPROM only operation.

**Table 2. 8XC51FA/FB/FC, 8XC51RA+/RB+/RC+/RD+ Special Function Registers** (Continued)

| SYMBOL | DESCRIPTION | DIRECT ADDRESS | BIT ADDRESS, SYMBOL, OR ALTERNATIVE PORT FUNCTION MSB | | | | | | | LSB | RESET VALUE |
|---|---|---|---|---|---|---|---|---|---|---|---|
| | | | D7 | D6 | D5 | D4 | D3 | D2 | D1 | D0 | |
| PSW* | Program Status Word | D0H | CY | AC | F0 | RS1 | RS0 | OV | – | P | 000000x0B |
| RACAP2H# | Timer 2 Capture High | CBH | | | | | | | | | 00H |
| RACAP2L# | Timer 2 Capture Low | CAH | | | | | | | | | 00H |
| SADDR# | Slave Address | A9H | | | | | | | | | 00H |
| SADEN# | Slave Address Mask | B9H | | | | | | | | | 00H |
| SBUF | Serial Data Buffer | 99H | | | | | | | | | xxxxxxxxB |
| | | | 9F | 9E | 9D | 9C | 9B | 9A | 99 | 98 | |
| SCON* | Serial Control | 98H | SM0/FE | SM1 | SM2 | REN | TB8 | RB8 | TI | RI | 00H |
| SP | Stack Pointer | 81H | | | | | | | | | 07H |
| | | | 8F | 8E | 8D | 8C | 8B | 8A | 89 | 88 | |
| TCON* | Timer Control | 88H | TF1 | TR1 | TF0 | TR0 | IE1 | IT1 | IE0 | IT0 | 00H |
| | | | CF | CE | CD | CC | CB | CA | C9 | C8 | |
| T2CON* | Timer 2 Control | C8H | TF2 | EXF2 | RCLK | TCLK | EXEN2 | TR2 | C/$\overline{T2}$ | CP/$\overline{RL2}$ | 00H |
| T2MOD# | Timer 2 Mode Control | C9H | – | – | – | – | – | – | T2OE | DCEN | xxxxxx00B |
| TH0 | Timer High 0 | 8CH | | | | | | | | | 00H |
| TH1 | Timer High 1 | 8DH | | | | | | | | | 00H |
| TH2# | Timer High 2 | CDH | | | | | | | | | 00H |
| TL0 | Timer Low 0 | 8AH | | | | | | | | | 00H |
| TL1 | Timer Low 1 | 8BH | | | | | | | | | 00H |
| TL2# | Timer Low 2 | CCH | | | | | | | | | 00H |
| TMOD | Timer Mode | 89H | GATE | C/$\overline{T}$ | M1 | M0 | GATE | C/$\overline{T}$ | M1 | M0 | 00H |
| WDTRST | HDW Watchdog Timer Reset (RX+ only) | 0A6H | | | | | | | | | |

* SFRs are bit addressable.
\# SFRs are modified from or added to the 80C51 SFRs.
– Reserved bits.

## OSCILLATOR CHARACTERISTICS

XTAL1 and XTAL2 are the input and output, respectively, of an inverting amplifier. The pins can be configured for use as an on-chip oscillator.

To drive the device from an external clock source, XTAL1 should be driven while XTAL2 is left unconnected. There are no requirements on the duty cycle of the external clock signal, because the input to the internal clock circuitry is through a divide-by-two flip-flop. However, minimum and maximum high and low times specified in the data sheet must be observed.

## RESET

A reset is accomplished by holding the RST pin high for at least two machine cycles (24 oscillator periods), while the oscillator is running. To insure a good power-on reset, the RST pin must be high long enough to allow the oscillator time to start up (normally a few milliseconds) plus two machine cycles. At power-on, the voltage on $V_{CC}$ and RST must come up at the same time for a proper start-up. Ports 1, 2, and 3 will asynchronously be driven to their reset condition when a voltage above $V_{IH1}$ (min.) is applied to RESET.

## LOW POWER MODES

### Stop Clock Mode

The static design enables the clock speed to be reduced down to 0 MHz (stopped). When the oscillator is stopped, the RAM and Special Function Registers retain their values. This mode allows step-by-step utilization and permits reduced system power consumption by lowering the clock frequency down to any value. For lowest power consumption the Power Down mode is suggested.

### Idle Mode

In the idle mode (see Table 3), the CPU puts itself to sleep while all of the on-chip peripherals stay active. The instruction to invoke the idle mode is the last instruction executed in the normal operating mode before the idle mode is activated. The CPU contents, the on-chip RAM, and all of the special function registers remain intact during this mode. The idle mode can be terminated either by any enabled interrupt (at which time the process is picked up at the interrupt service routine and continued), or by a hardware reset which starts the processor in the same manner as a power-on reset.

### Power-Down Mode

To save even more power, a Power Down mode (see Table 3) can be invoked by software. In this mode, the oscillator is stopped and the instruction that invoked Power Down is the last instruction executed. The on-chip RAM and Special Function Registers retain their values down to 2.0V and care must be taken to return $V_{CC}$ to the minimum specified operating voltages before the Power Down Mode is terminated.

Either a hardware reset or external interrupt can be used to exit from Power Down. Reset redefines all the SFRs but does not change the on-chip RAM. An external interrupt allows both the SFRs and the on-chip RAM to retain their values.

To properly terminate Power Down the reset or external interrupt should not be executed before $V_{CC}$ is restored to its normal operating level and must be held active long enough for the oscillator to restart and stabilize (normally less than 10ms).

With an external interrupt, INT0 and INT1 must be enabled and configured as level-sensitive. Holding the pin low restarts the oscillator but bringing the pin back high completes the exit. Once the interrupt is serviced, the next instruction to be executed after RETI will be the one following the instruction that put the device into Power Down.

### LPEP

The LPEP bit (AUXR.4), only needs to be set for applications operating at $V_{CC}$ less than 4V.

## POWER OFF FLAG

The Power Off Flag (POF) is set by on-chip circuitry when the $V_{CC}$ level on the 8XC51FX/8XC51RX+ rises from 0 to 5V. The POF bit can be set or cleared by software allowing a user to determine if the reset is the result of a power-on or a warm start after powerdown. The $V_{CC}$ level must remain above 3V for the POF to remain unaffected by the $V_{CC}$ level.

### Design Consideration

- When the idle mode is terminated by a hardware reset, the device normally resumes program execution, from where it left off, up to two machine cycles before the internal reset algorithm takes control. On-chip hardware inhibits access to internal RAM in this event, but access to the port pins is not inhibited. To eliminate the possibility of an unexpected write when Idle is terminated by reset, the instruction following the one that invokes Idle should not be one that writes to a port pin or to external memory.

### ONCE™ Mode

The ONCE ("On-Circuit Emulation") Mode facilitates testing and debugging of systems without the device having to be removed from the circuit. The ONCE Mode is invoked by:

1. Pull ALE low while the device is in reset and $\overline{PSEN}$ is high;
2. Hold ALE low as RST is deactivated.

While the device is in ONCE Mode, the Port 0 pins go into a float state, and the other port pins and ALE and $\overline{PSEN}$ are weakly pulled high. The oscillator circuit remains active. While the device is in this mode, an emulator or test CPU can be used to drive the circuit. Normal operation is restored when a normal reset is applied.

### Programmable Clock-Out

A 50% duty cycle clock can be programmed to come out on P1.0. This pin, besides being a regular I/O pin, has two alternate functions. It can be programmed:

1. to input the external clock for Timer/Counter 2, or
2. to output a 50% duty cycle clock ranging from 61Hz to 4MHz at a 16MHz operating frequency.

To configure the Timer/Counter 2 as a clock generator, bit C/$\overline{T}$2 (in T2CON) must be cleared and bit T20E in T2MOD must be set. Bit TR2 (T2CON.2) also must be set to start the timer.

The Clock-Out frequency depends on the oscillator frequency and the reload value of Timer 2 capture registers (RCAP2H, RCAP2L) as shown in this equation:

$$\frac{\text{Oscillator Frequency}}{4 \times (65536 - \text{RCAP2H, RCAP2L})}$$

Where (RCAP2H,RCAP2L) = the content of RCAP2H and RCAP2L taken as a 16-bit unsigned integer.

In the Clock-Out mode Timer 2 roll-overs will not generate an interrupt. This is similar to when it is used as a baud-rate generator. It is possible to use Timer 2 as a baud-rate generator and a clock generator simultaneously. Note, however, that the baud-rate and the Clock-Out frequency will be the same.

**Table 3. External Pin Status During Idle and Power-Down Mode**

| MODE | PROGRAM MEMORY | ALE | $\overline{PSEN}$ | PORT 0 | PORT 1 | PORT 2 | PORT 3 |
|---|---|---|---|---|---|---|---|
| Idle | Internal | 1 | 1 | Data | Data | Data | Data |
| Idle | External | 1 | 1 | Float | Data | Address | Data |
| Power-down | Internal | 0 | 0 | Data | Data | Data | Data |
| Power-down | External | 0 | 0 | Float | Data | Data | Data |

## TIMER 2 OPERATION

### Timer 2

Timer 2 is a 16-bit Timer/Counter which can operate as either an event timer or an event counter, as selected by C/$\overline{T}$2* in the special function register T2CON (see Figure 1). Timer 2 has three operating modes: Capture, Auto-reload (up or down counting), and Baud Rate Generator, which are selected by bits in the T2CON as shown in Table 4.

### Capture Mode

In the capture mode there are two options which are selected by bit EXEN2 in T2CON. If EXEN2=0, then timer 2 is a 16-bit timer or counter (as selected by C/$\overline{T}$2* in T2CON) which, upon overflowing sets bit TF2, the timer 2 overflow bit. This bit can be used to generate an interrupt (by enabling the Timer 2 interrupt bit in the IE register). If EXEN2= 1, Timer 2 operates as described above, but with the added feature that a 1-to-0 transition at external input T2EX causes the current value in the Timer 2 registers, TL2 and TH2, to be captured into registers RCAP2L and RCAP2H, respectively. In addition, the transition at T2EX causes bit EXF2 in T2CON to be set, and EXF2 like TF2 can generate an interrupt (which vectors to the same location as Timer 2 overflow interrupt. The Timer 2 interrupt service routine can interrogate TF2 and EXF2 to determine which event caused the interrupt). The capture mode is illustrated in Figure 2. (There is no reload value for TL2 and TH2 in this mode. Even when a capture event occurs from T2EX, the counter keeps on counting T2EX pin transitions or osc/12 pulses.)

### Auto-Reload Mode (Up or Down Counter)

In the 16-bit auto-reload mode, Timer 2 can be configured (as either a timer or counter [C/$\overline{T}$2* in T2CON]) then programmed to count up or down. The counting direction is determined by bit DCEN (Down Counter Enable) which is located in the T2MOD register (see Figure 3). When reset is applied the DCEN=0 which means Timer 2 will default to counting up. If DCEN bit is set, Timer 2 can count up or down depending on the value of the T2EX pin.

Figure 4 shows Timer 2 which will count up automatically since DCEN=0. In this mode there are two options selected by bit EXEN2 in T2CON register. If EXEN2=0, then Timer 2 counts up to 0FFFFH and sets the TF2 (Overflow Flag) bit upon overflow. This causes the Timer 2 registers to be reloaded with the 16-bit value in RCAP2L and RCAP2H. The values in RCAP2L and RCAP2H are preset by software means.

If EXEN2=1, then a 16-bit reload can be triggered either by an overflow or by a 1-to-0 transition at input T2EX. This transition also sets the EXF2 bit. The Timer 2 interrupt, if enabled, can be generated when either TF2 or EXF2 are 1.

In Figure 5 DCEN=1, which enables Timer 2 to count up or down. This mode allows pin T2EX to control the direction of count. When a logic 1 is applied at pin T2EX Timer 2 will count up. Timer 2 will overflow at 0FFFFH and set the TF2 flag, which can then generate an interrupt, if the interrupt is enabled. This timer overflow also causes the 16–bit value in RCAP2L and RCAP2H to be reloaded into the timer registers TL2 and TH2.

When a logic 0 is applied at pin T2EX this causes Timer 2 to count down. The timer will underflow when TL2 and TH2 become equal to the value stored in RCAP2L and RCAP2H. Timer 2 underflow sets the TF2 flag and causes 0FFFFH to be reloaded into the timer registers TL2 and TH2.

The external flag EXF2 toggles when Timer 2 underflows or overflows. This EXF2 bit can be used as a 17th bit of resolution if needed. The EXF2 flag does not generate an interrupt in this mode of operation.

(MSB) (LSB)

| TF2 | EXF2 | RCLK | TCLK | EXEN2 | TR2 | C/$\overline{T2}$ | CP/$\overline{RL2}$ |
|---|---|---|---|---|---|---|---|

| Symbol | Position | Name and Significance |
|---|---|---|
| TF2 | T2CON.7 | Timer 2 overflow flag set by a Timer 2 overflow and must be cleared by software. TF2 will not be set when either RCLK or TCLK = 1. |
| EXF2 | T2CON.6 | Timer 2 external flag set when either a capture or reload is caused by a negative transition on T2EX and EXEN2 = 1. When Timer 2 interrupt is enabled, EXF2 = 1 will cause the CPU to vector to the Timer 2 interrupt routine. EXF2 must be cleared by software. EXF2 does not cause an interrupt in up/down counter mode (DCEN = 1). |
| RCLK | T2CON.5 | Receive clock flag. When set, causes the serial port to use Timer 2 overflow pulses for its receive clock in modes 1 and 3. RCLK = 0 causes Timer 1 overflow to be used for the receive clock. |
| TCLK | T2CON.4 | Transmit clock flag. When set, causes the serial port to use Timer 2 overflow pulses for its transmit clock in modes 1 and 3. TCLK = 0 causes Timer 1 overflows to be used for the transmit clock. |
| EXEN2 | T2CON.3 | Timer 2 external enable flag. When set, allows a capture or reload to occur as a result of a negative transition on T2EX if Timer 2 is not being used to clock the serial port. EXEN2 = 0 causes Timer 2 to ignore events at T2EX. |
| TR2 | T2CON.2 | Start/stop control for Timer 2. A logic 1 starts the timer. |
| C/$\overline{T2}$ | T2CON.1 | Timer or counter select. (Timer 2)<br>0 = Internal timer (OSC/12)<br>1 = External event counter (falling edge triggered). |
| CP/$\overline{RL2}$ | T2CON.0 | Capture/Reload flag. When set, captures will occur on negative transitions at T2EX if EXEN2 = 1. When cleared, auto-reloads will occur either with Timer 2 overflows or negative transitions at T2EX when EXEN2 = 1. When either RCLK = 1 or TCLK = 1, this bit is ignored and the timer is forced to auto-reload on Timer 2 overflow. |

SU00728

**Figure 1. Timer/Counter 2 (T2CON) Control Register**

**Table 4. Timer 2 Operating Modes**

| RCLK + TCLK | CP/$\overline{RL2}$ | TR2 | MODE |
|---|---|---|---|
| 0 | 0 | 1 | 16-bit Auto-reload |
| 0 | 1 | 1 | 16-bit Capture |
| 1 | X | 1 | Baud rate generator |
| X | X | 0 | (off) |

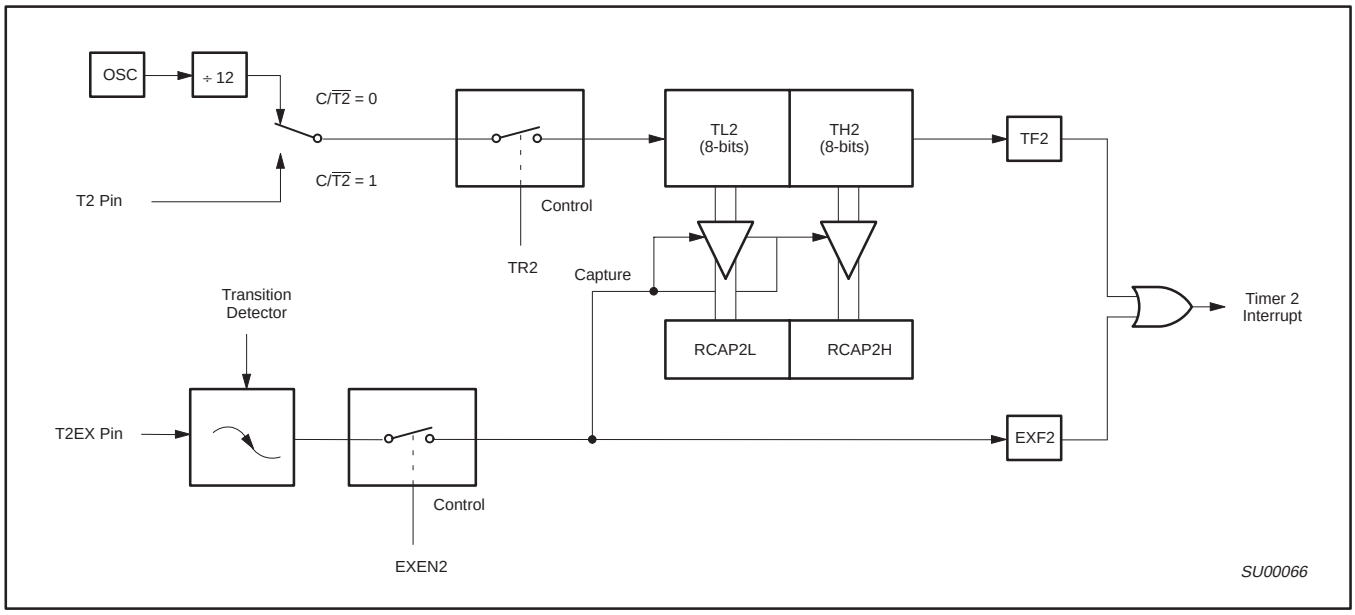


**Figure 2. Timer 2 in Capture Mode**

**T2MOD** Address = 0C9H Reset Value = XXXX XX00B

Not Bit Addressable

| | | | | | | | |
|---|---|---|---|---|---|---|---|
| — | — | — | — | — | — | T2OE | DCEN |
| Bit 7 | 6 | 5 | 4 | 3 | 2 | 1 | 0 |

| Symbol | Function |
|---|---|
| — | Not implemented, reserved for future use.* |
| T2OE | Timer 2 Output Enable bit. |
| DCEN | Down Count Enable bit. When set, this allows Timer 2 to be configured as an up/down counter. |

* User software should not write 1s to reserved bits. These bits may be used in future 8051 family products to invoke new features. In that case, the reset or inactive value of the new bit will be 0, and its active value will be 1. The value read from a reserved bit is indeterminate.

SU00729

**Figure 3. Timer 2 Mode (T2MOD) Control Register**

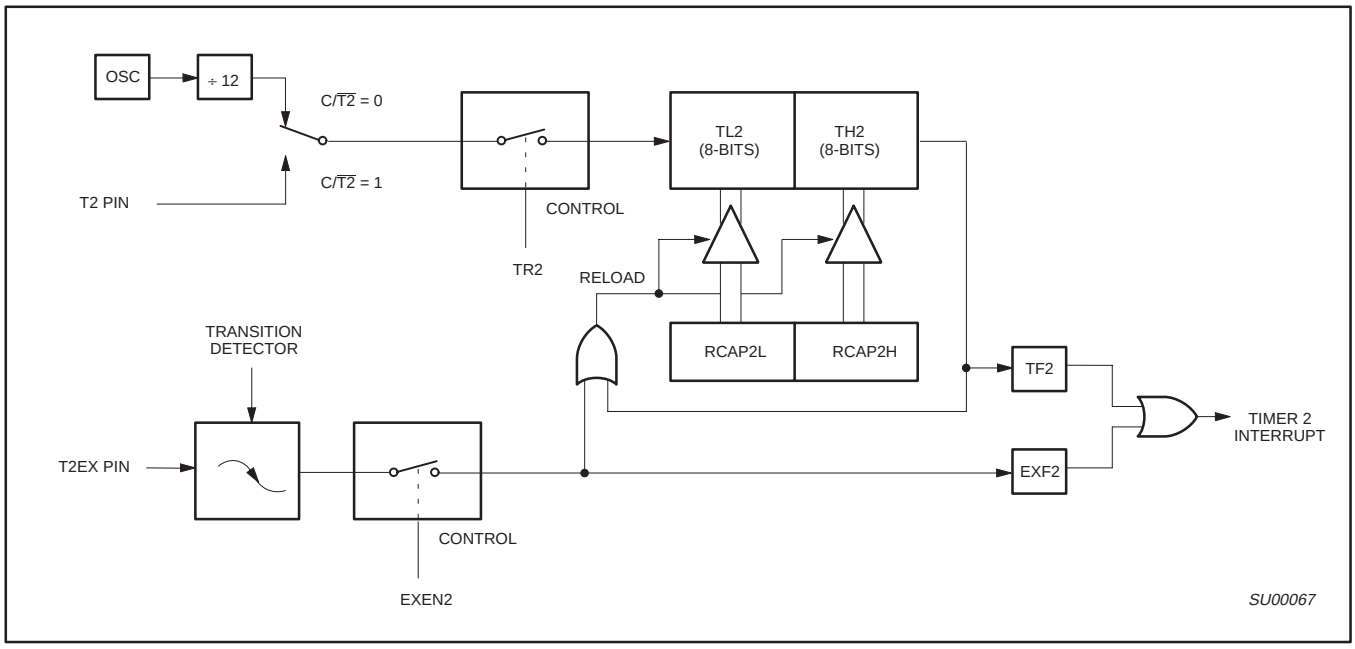


**Figure 4. Timer 2 in Auto-Reload Mode (DCEN = 0)**

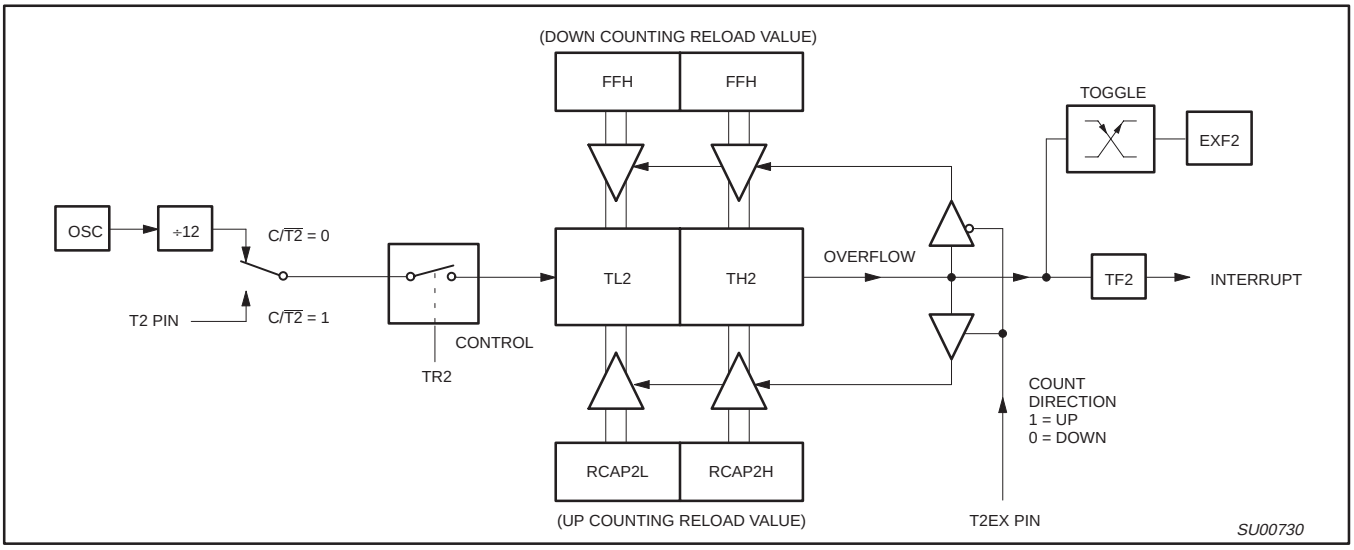


**Figure 5. Timer 2 Auto Reload Mode (DCEN = 1)**

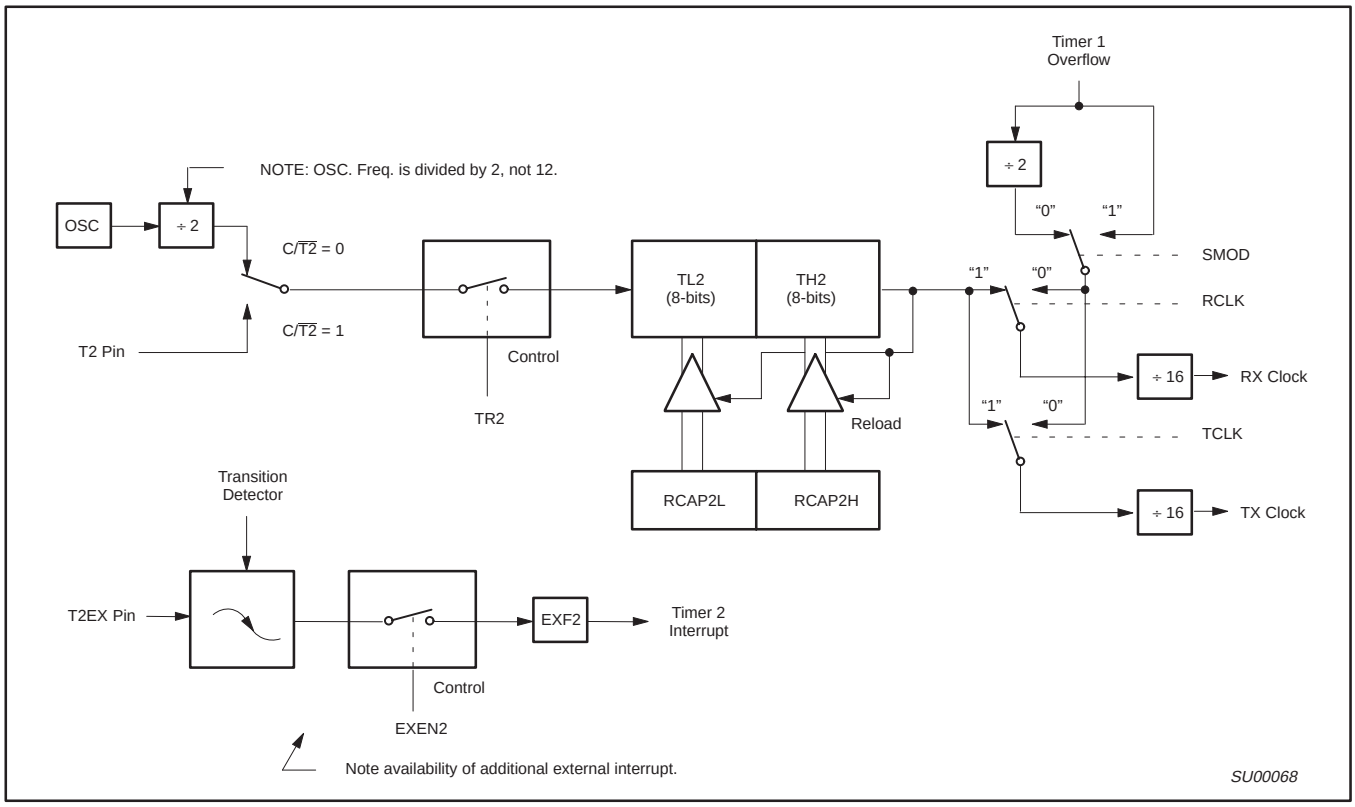


**Figure 6. Timer 2 in Baud Rate Generator Mode**

## Table 5. Timer 2 Generated Commonly Used Baud Rates

| Baud Rate | Osc Freq | Timer 2 | |
|---|---|---|---|
| | | RCAP2H | RCAP2L |
| 375K | 12MHz | FF | FF |
| 9.6K | 12MHz | FF | D9 |
| 2.8K | 12MHz | FF | B2 |
| 2.4K | 12MHz | FF | 64 |
| 1.2K | 12MHz | FE | C8 |
| 300 | 12MHz | FB | 1E |
| 110 | 12MHz | F2 | AF |
| 300 | 6MHz | FD | 8F |
| 110 | 6MHz | F9 | 57 |

## Baud Rate Generator Mode

Bits TCLK and/or RCLK in T2CON (Table 5) allow the serial port transmit and receive baud rates to be derived from either Timer 1 or Timer 2. When TCLK= 0, Timer 1 is used as the serial port transmit baud rate generator. When TCLK= 1, Timer 2 is used as the serial port transmit baud rate generator. RCLK has the same effect for the serial port receive baud rate. With these two bits, the serial port can have different receive and transmit baud rates – one generated by Timer 1, the other by Timer 2.

Figure 6 shows the Timer 2 in baud rate generation mode. The baud rate generation mode is like the auto-reload mode,in that a rollover in TH2 causes the Timer 2 registers to be reloaded with the 16-bit value in registers RCAP2H and RCAP2L, which are preset by software.

The baud rates in modes 1 and 3 are determined by Timer 2's overflow rate given below:

$$\text{Modes 1 and 3 Baud Rates} = \frac{\text{Timer 2 Overflow Rate}}{16}$$

The timer can be configured for either "timer" or "counter" operation. In many applications, it is configured for "timer" operation (C/$\overline{T}$2*=0). Timer operation is different for Timer 2 when it is being used as a baud rate generator.

Usually, as a timer it would increment every machine cycle (i.e., 1/12 the oscillator frequency). As a baud rate generator, it increments every state time (i.e., 1/2 the oscillator frequency). Thus the baud rate formula is as follows:

$$\text{Modes 1 and 3 Baud Rates} = \frac{\text{Oscillator Frequency}}{[32 \times [65536 - (\text{RCAP2H}, \text{RCAP2L})]]}$$

Where: (RCAP2H, RCAP2L)= The content of RCAP2H and RCAP2L taken as a 16-bit unsigned integer.

The Timer 2 as a baud rate generator mode shown in Figure 6, is valid only if RCLK and/or TCLK = 1 in T2CON register. Note that a rollover in TH2 does not set TF2, and will not generate an interrupt. Thus, the Timer 2 interrupt does not have to be disabled when Timer 2 is in the baud rate generator mode. Also if the EXEN2 (T2 external enable flag) is set, a 1-to-0 transition in T2EX (Timer/counter 2 trigger input) will set EXF2 (T2 external flag) but will not cause a reload from (RCAP2H, RCAP2L) to (TH2,TL2). Therefore when Timer 2 is in use as a baud rate generator, T2EX can be used as an additional external interrupt, if needed.

When Timer 2 is in the baud rate generator mode, one should not try to read or write TH2 and TL2. As a baud rate generator, Timer 2 is incremented every state time (osc/2) or asynchronously from pin T2; under these conditions, a read or write of TH2 or TL2 may not be accurate. The RCAP2 registers may be read, but should not be written to, because a write might overlap a reload and cause write and/or reload errors. The timer should be turned off (clear TR2) before accessing the Timer 2 or RCAP2 registers.

Table 5 shows commonly used baud rates and how they can be obtained from Timer 2.

## Summary Of Baud Rate Equations

Timer 2 is in baud rate generating mode. If Timer 2 is being clocked through pin T2(P1.0) the baud rate is:

$$\text{Baud Rate} = \frac{\text{Timer 2 Overflow Rate}}{16}$$

If Timer 2 is being clocked internally , the baud rate is:

$$\text{Baud Rate} = \frac{f_{OSC}}{[32 \times [65536 - (\text{RCAP2H, RCAP2L})]]}$$

Where $f_{OSC}$= Oscillator Frequency

To obtain the reload value for RCAP2H and RCAP2L, the above equation can be rewritten as:

$$\text{RCAP2H, RCAP2L} = 65536 - \left(\frac{f_{OSC}}{32 \times \text{Baud Rate}}\right)$$

## Timer/Counter 2 Set-up

Except for the baud rate generator mode, the values given for T2CON do not include the setting of the TR2 bit. Therefore, bit TR2 must be set, separately, to turn the timer on. See Table 6 for set-up of Timer 2 as a timer. Also see Table 7 for set-up of Timer 2 as a counter.

### Table 6. Timer 2 as a Timer

| MODE | T2CON | |
|---|---|---|
| | INTERNAL CONTROL (Note 1) | EXTERNAL CONTROL (Note 2) |
| 16-bit Auto-Reload | 00H | 08H |
| 16-bit Capture | 01H | 09H |
| Baud rate generator receive and transmit same baud rate | 34H | 36H |
| Receive only | 24H | 26H |
| Transmit only | 14H | 16H |

### Table 7. Timer 2 as a Counter

| MODE | TMOD | |
|---|---|---|
| | INTERNAL CONTROL (Note 1) | EXTERNAL CONTROL (Note 2) |
| 16-bit | 02H | 0AH |
| Auto-Reload | 03H | 0BH |

**NOTES:**
1. Capture/reload occurs only on timer/counter overflow.
2. Capture/reload occurs on timer/counter overflow and a 1-to-0 transition on T2EX (P1.1) pin except when Timer 2 is used in the baud rate generator mode.

## Enhanced UART

The UART operates in all of the usual modes that are described in the first section of *Data Handbook IC20, 80C51-Based 8-Bit Microcontrollers*. In addition the UART can perform framing error detect by looking for missing stop bits, and automatic address recognition. The UART also fully supports multiprocessor communication as does the standard 80C51 UART.

When used for framing error detect the UART looks for missing stop bits in the communication. A missing bit will set the FE bit in the SCON register. The FE bit shares the SCON.7 bit with SM0 and the function of SCON.7 is determined by PCON.6 (SMOD0) (see Figure 7). If SMOD0 is set then SCON.7 functions as FE. SCON.7 functions as SM0 when SMOD0 is cleared. When used as FE SCON.7 can only be cleared by software. Refer to Figure 8.

**Automatic Address Recognition**

Automatic Address Recognition is a feature which allows the UART to recognize certain addresses in the serial bit stream by using hardware to make the comparisons. This feature saves a great deal of software overhead by eliminating the need for the software to examine every serial address which passes by the serial port. This feature is enabled by setting the SM2 bit in SCON. In the 9 bit UART modes, mode 2 and mode 3, the Receive Interrupt flag (RI) will be automatically set when the received byte contains either the “Given” address or the “Broadcast” address. The 9 bit mode requires that the 9th information bit is a 1 to indicate that the received information is an address and not data. Automatic address recognition is shown in Figure 9.

The 8 bit mode is called Mode 1. In this mode the RI flag will be set if SM2 is enabled and the information received has a valid stop bit following the 8 address bits and the information is either a Given or Broadcast address.

Mode 0 is the Shift Register mode and SM2 is ignored.

Using the Automatic Address Recognition feature allows a master to selectively communicate with one or more slaves by invoking the Given slave address or addresses. All of the slaves may be contacted by using the Broadcast address. Two special Function Registers are used to define the slave’s address, SADDR, and the address mask, SADEN. SADEN is used to define which bits in the SADDR are to b used and which bits are “don’t care”. The SADEN mask can be logically ANDed with the SADDR to create the “Given” address which the master will use for addressing each of the slaves. Use of the Given address allows multiple slaves to be recognized while excluding others. The following examples will help to show the versatility of this scheme:

| | | | |
|---|---|---|---|
| Slave 0 | SADDR | = | 1100 0000 |
| | SADEN | = | 1111 1101 |
| | Given | = | 1100 00X0 |
| Slave 1 | SADDR | = | 1100 0000 |
| | SADEN | = | 1111 1110 |
| | Given | = | 1100 000X |

In the above example SADDR is the same and the SADEN data is used to differentiate between the two slaves. Slave 0 requires a 0 in bit 0 and it ignores bit 1. Slave 1 requires a 0 in bit 1 and bit 0 is ignored. A unique address for Slave 0 would be 1100 0010 since slave 1 requires a 0 in bit 1. A unique address for slave 1 would be 1100 0001 since a 1 in bit 0 will exclude slave 0. Both slaves can be selected at the same time by an address which has bit 0 = 0 (for slave 0) and bit 1 = 0 (for slave 1). Thus, both could be addressed with 1100 0000.

In a more complex system the following could be used to select slaves 1 and 2 while excluding slave 0:

| | | | |
|---|---|---|---|
| Slave 0 | SADDR | = | 1100 0000 |
| | SADEN | = | 1111 1001 |
| | Given | = | 1100 0XX0 |
| Slave 1 | SADDR | = | 1110 0000 |
| | SADEN | = | 1111 1010 |
| | Given | = | 1110 0X0X |
| Slave 2 | SADDR | = | 1110 0000 |
| | SADEN | = | 1111 1100 |
| | Given | = | 1110 00XX |

In the above example the differentiation among the 3 slaves is in the lower 3 address bits. Slave 0 requires that bit 0 = 0 and it can be uniquely addressed by 1110 0110. Slave 1 requires that bit 1 = 0 and it can be uniquely addressed by 1110 and 0101. Slave 2 requires that bit 2 = 0 and its unique address is 1110 0011. To select Slaves 0 and 1 and exclude Slave 2 use address 1110 0100, since it is necessary to make bit 2 = 1 to exclude slave 2.

The Broadcast Address for each slave is created by taking the logical OR of SADDR and SADEN. Zeros in this result are trended as don’t-cares. In most cases, interpreting the don’t-cares as ones, the broadcast address will be FF hexadecimal.

Upon reset SADDR (SFR address 0A9H) and SADEN (SFR address 0B9H) are leaded with 0s. This produces a given address of all “don’t cares” as well as a Broadcast address of all “don’t cares”. This effectively disables the Automatic Addressing mode and allows the microcontroller to use standard 80C51 type UART drivers which do not make use of this feature.

**SCON** Address = 98H — Reset Value = 0000 0000B

Bit Addressable

| | | | | | | | | |
|---|---|---|---|---|---|---|---|---|
| | **SM0/FE** | **SM1** | **SM2** | **REN** | **TB8** | **RB8** | **TI** | **RI** |
| Bit: | 7 | 6 | 5 | 4 | 3 | 2 | 1 | 0 |
| | (SMOD0 = 0/1)* | | | | | | | |

| **Symbol** | **Function** |
|---|---|
| **FE** | Framing Error bit. This bit is set by the receiver when an invalid stop bit is detected. The FE bit is not cleared by valid frames but should be cleared by software. The SMOD0 bit must be set to enable access to the FE bit. |
| **SM0** | Serial Port Mode Bit 0, (SMOD0 must = 0 to access bit SM0) |
| **SM1** | Serial Port Mode Bit 1 |

| **SM0** | **SM1** | **Mode** | **Description** | **Baud Rate**** |
|---|---|---|---|---|
| 0 | 0 | 0 | shift register | $f_{OSC}/12$ |
| 0 | 1 | 1 | 8-bit UART | variable |
| 1 | 0 | 2 | 9-bit UART | $f_{OSC}/64$ or $f_{OSC}/32$ |
| 1 | 1 | 3 | 9-bit UART | variable |

| | |
|---|---|
| **SM2** | Enables the Automatic Address Recognition feature in Modes 2 or 3. If SM2 = 1 then RI will not be set unless the received 9th data bit (RB8) is 1, indicating an address, and the received byte is a Given or Broadcast Address. In Mode 1, if SM2 = 1 then RI will not be activated unless a valid stop bit was received, and the received byte is a Given or Broadcast Address. In Mode 0, SM2 should be 0. |
| **REN** | Enables serial reception. Set by software to enable reception. Clear by software to disable reception. |
| **TB8** | The 9th data bit that will be transmitted in Modes 2 and 3. Set or clear by software as desired. |
| **RB8** | In modes 2 and 3, the 9th data bit that was received. In Mode 1, if SM2 = 0, RB8 is the stop bit that was received. In Mode 0, RB8 is not used. |
| **TI** | Transmit interrupt flag. Set by hardware at the end of the 8th bit time in Mode 0, or at the beginning of the stop bit in the other modes, in any serial transmission. Must be cleared by software. |
| **RI** | Receive interrupt flag. Set by hardware at the end of the 8th bit time in Mode 0, or halfway through the stop bit time in the other modes, in any serial reception (except see SM2). Must be cleared by software. |

**NOTE:**
*SMOD0 is located at PCON6.
**$f_{OSC}$ = oscillator frequency

*SU00043*

**Figure 7. SCON: Serial Port Control Register**

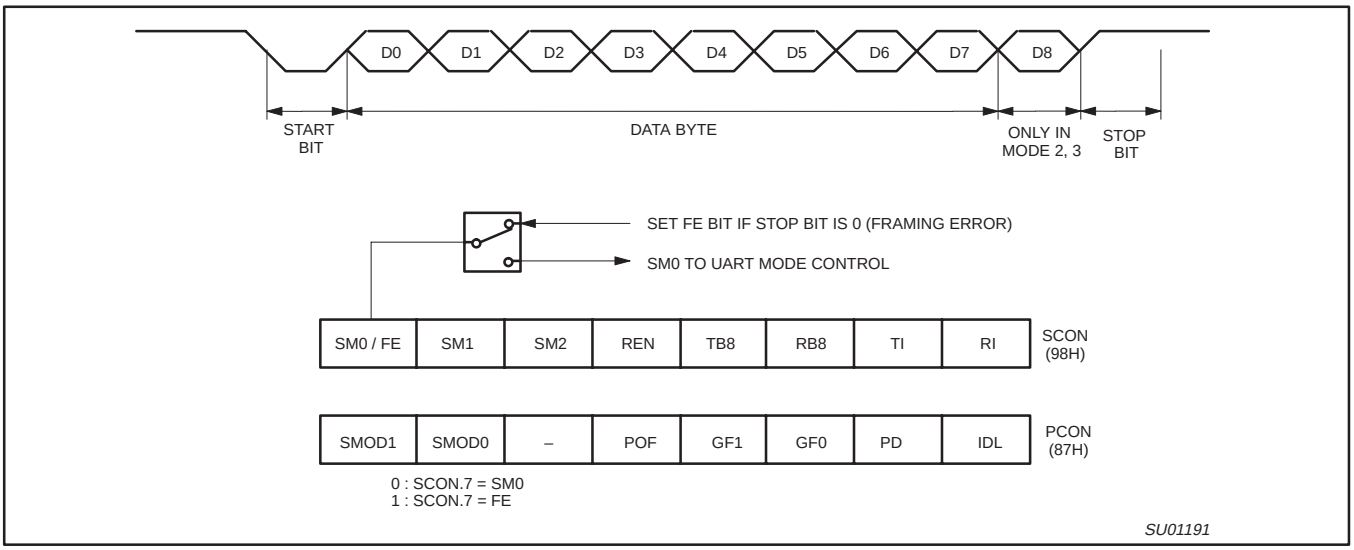


**Figure 8. UART Framing Error Detection**

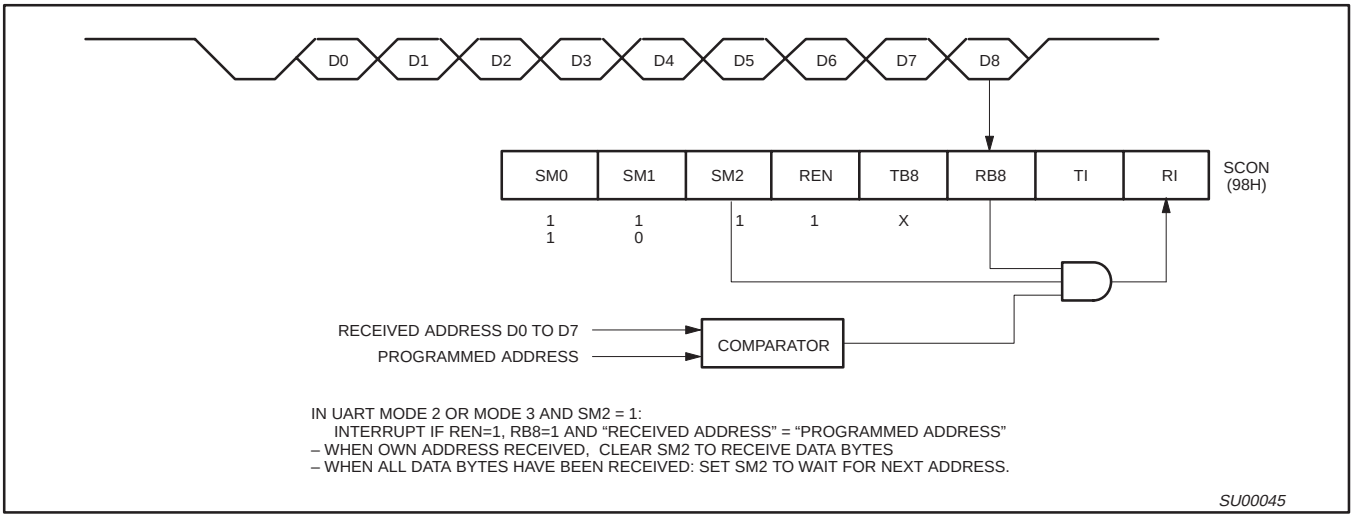


**Figure 9. UART Multiprocessor Communication, Automatic Address Recognition**

## Interrupt Priority Structure

The 8XC51FA/FB/FC and 8XC51RA+/RB+/RC+/RD+ have a 7-source four-level interrupt structure (see Table 8). The 80C52/54/58 and 80C32 only have a 6-source four-level interrupt structure because these devices do not have a PCA.

There are 3 SFRs associated with the four-level interrupt. They are the IE, IP, and IPH. (See Figures 10, 11, and 12.) The IPH (Interrupt Priority High) register makes the four-level interrupt structure possible. The IPH is located at SFR address B7H. The structure of the IPH register and a description of its bits is shown in Figure 12.

The function of the IPH SFR is simple and when combined with the IP SFR determines the priority of each interrupt. The priority of each interrupt is determined as shown in the following table:

| PRIORITY BITS | | INTERRUPT PRIORITY LEVEL |
|---|---|---|
| IPH.x | IP.x | |
| 0 | 0 | Level 0 (lowest priority) |
| 0 | 1 | Level 1 |
| 1 | 0 | Level 2 |
| 1 | 1 | Level 3 (highest priority) |

The priority scheme for servicing the interrupts is the same as that for the 80C51, except there are four interrupt levels rather than two as on the 80C51. An interrupt will be serviced as long as an interrupt of equal or higher priority is not already being serviced. If an interrupt of equal or higher level priority is being serviced, the new interrupt will wait until it is finished before being serviced. If a lower priority level interrupt is being serviced, it will be stopped and the new interrupt serviced. When the new interrupt is finished, the lower priority level interrupt that was stopped will be completed.

### Table 8. Interrupt Table

| SOURCE | POLLING PRIORITY | REQUEST BITS | HARDWARE CLEAR? | VECTOR ADDRESS |
|---|---|---|---|---|
| X0 | 1 | IE0 | N (L)[1] Y (T)[2] | 03H |
| T0 | 2 | TF0 | Y | 0B |
| X1 | 3 | IE1 | N (L) Y (T) | 13 |
| T1 | 4 | TF1 | Y | 1B |
| PCA | 5 | CF, CCFn<br>n = 0–4 | N | 33 |
| SP | 6 | RI, TI | N | 23 |
| T2 | 7 | TF2, EXF2 | N | 2B |

**NOTES:**
1. L = Level activated
2. T = Transition activated

| | 7 | 6 | 5 | 4 | 3 | 2 | 1 | 0 |
|---|---|---|---|---|---|---|---|---|
| **IE (0A8H)** | EA | EC | ET2 | ES | ET1 | EX1 | ET0 | EX0 |

Enable Bit = 1 enables the interrupt.
Enable Bit = 0 disables it.

| BIT | SYMBOL | FUNCTION |
|---|---|---|
| IE.7 | EA | Global disable bit. If EA = 0, all interrupts are disabled. If EA = 1, each interrupt can be individually enabled or disabled by setting or clearing its enable bit. |
| IE.6 | EC | PCA interrupt enable bit for FX and RX+ only – otherwise it is not implemented. |
| IE.5 | ET2 | Timer 2 interrupt enable bit. |
| IE.4 | ES | Serial Port interrupt enable bit. |
| IE.3 | ET1 | Timer 1 interrupt enable bit. |
| IE.2 | EX1 | External interrupt 1 enable bit. |
| IE.1 | ET0 | Timer 0 interrupt enable bit. |
| IE.0 | EX0 | External interrupt 0 enable bit. |

SU00840

**Figure 10. IE Registers**

| | 7 | 6 | 5 | 4 | 3 | 2 | 1 | 0 |
|---|---|---|---|---|---|---|---|---|
| **IP (0B8H)** | — | PPC | PT2 | PS | PT1 | PX1 | PT0 | PX0 |

Priority Bit = 1 assigns high priority
Priority Bit = 0 assigns low priority

| BIT | SYMBOL | FUNCTION |
|---|---|---|
| IP.7 | — | Not implemented, reserved for future use. |
| IP.6 | PPC | PCA interrupt priority bit for FX and RX+ only, otherwise it is not implemented. |
| IP.5 | PT2 | Timer 2 interrupt priority bit. |
| IP.4 | PS | Serial Port interrupt priority bit. |
| IP.3 | PT1 | Timer 1 interrupt priority bit. |
| IP.2 | PX1 | External interrupt 1 priority bit. |
| IP.1 | PT0 | Timer 0 interrupt priority bit. |
| IP.0 | PX0 | External interrupt 0 priority bit. |

SU00841

**Figure 11. IP Registers**

| | 7 | 6 | 5 | 4 | 3 | 2 | 1 | 0 |
|---|---|---|---|---|---|---|---|---|
| **IPH (B7H)** | — | PPCH | PT2H | PSH | PT1H | PX1H | PT0H | PX0H |

Priority Bit = 1 assigns higher priority
Priority Bit = 0 assigns lower priority

| BIT | SYMBOL | FUNCTION |
|---|---|---|
| IPH.7 | — | Not implemented, reserved for future use. |
| IPH.6 | PPCH | PCA interrupt priority bit high for FX and RX+ only, otherwise it is not implemented. |
| IPH.5 | PT2H | Timer 2 interrupt priority bit high. |
| IPH.4 | PSH | Serial Port interrupt priority bit high. |
| IPH.3 | PT1H | Timer 1 interrupt priority bit high. |
| IPH.2 | PX1H | External interrupt 1 priority bit high. |
| IPH.1 | PT0H | Timer 0 interrupt priority bit high. |
| IPH.0 | PX0H | External interrupt 0 priority bit high. |

SU00881

**Figure 12. IPH Registers**

## Reduced EMI Mode

The AO bit (AUXR.0) in the AUXR register when set disables the ALE output.

## Reduced EMI Mode

**AUXR (8EH)**

| 7 | 6 | 5 | 4 | 3 | 2 | 1 | 0 |
|---|---|---|---|---|---|---|---|
| – | – | – | – | – | – | EXTRAM | AO |

| | | |
|---|---|---|
| AUXR.1 | EXTRAM | (RX+ only) |
| AUXR.0 | AO | Turns off ALE output. |

## Dual DPTR

The dual DPTR structure (see Figure 13) is a way by which the chip will specify the address of an external data memory location. There are two 16-bit DPTR registers that address the external memory, and a single bit called DPS = AUXR1/bit0 that allows the program code to switch between them.

- New Register Name: AUXR1#
- SFR Address: A2H
- Reset Value: xxxx00x0B

| 7 | 6 | 5 | 4 | 3 | 2 | 1 | 0 |
|---|---|---|---|---|---|---|---|
| – | – | – | LPEP | GF3 | 0 | – | DPS |

Where:
DPS = AUXR1/bit0 = Switches between DPTR0 and DPTR1.

| Select Reg | DPS |
|---|---|
| DPTR0 | 0 |
| DPTR1 | 1 |

The DPS bit status should be saved by software when switching between DPTR0 and DPTR1.

The GF3 bit is a general purpose user–defined flag. Note that bit 2 is not writable and is always read as a zero. This allows the DPS bit to be quickly toggled simply by executing an INC DPTR instruction without affecting the GF3 or LPEP bits.

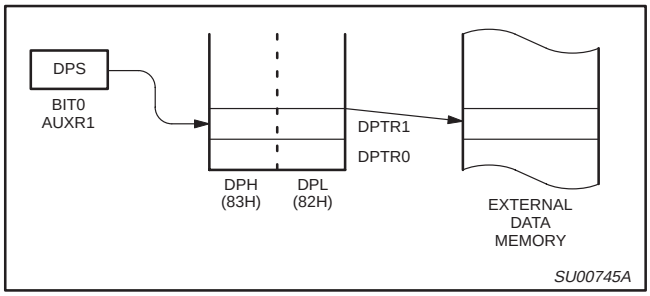


**Figure 13.**

**DPTR Instructions**

The instructions that refer to DPTR refer to the data pointer that is currently selected using the AUXR1/bit 0 register. The six instructions that use the DPTR are as follows:

| | |
|---|---|
| INC DPTR | Increments the data pointer by 1 |
| MOV DPTR, #data16 | Loads the DPTR with a 16-bit constant |
| MOV A, @ A+DPTR | Move code byte relative to DPTR to ACC |
| MOVX A, @ DPTR | Move external RAM (16-bit address) to ACC |
| MOVX @ DPTR , A | Move ACC to external RAM (16-bit address) |
| JMP @ A + DPTR | Jump indirect relative to DPTR |

The data pointer can be accessed on a byte-by-byte basis by specifying the low or high byte in an instruction which accesses the SFRs. See application note AN458 for more details.

**(8XC51FX and 8XC51RX+ ONLY)**

## Programmable Counter Array (PCA) (8XC51FX and 8XC51RX+ only)

The Programmable Counter Array available on the 8XC51FX and 8XC51RX+ is a special 16-bit Timer that has five 16-bit capture/compare modules associated with it. Each of the modules can be programmed to operate in one of four modes: rising and/or falling edge capture, software timer, high-speed output, or pulse width modulator. Each module has a pin associated with it in port 1. Module 0 is connected to P1.3(CEX0), module 1 to P1.4(CEX1), etc. The basic PCA configuration is shown in Figure 14.

The PCA timer is a common time base for all five modules and can be programmed to run at: 1/12 the oscillator frequency, 1/4 the oscillator frequency, the Timer 0 overflow, or the input on the ECI pin (P1.2). The timer count source is determined from the CPS1 and CPS0 bits in the CMOD SFR as follows (see Figure 17):

| CPS1 | CPS0 | PCA Timer Count Source |
|---|---|---|
| 0 | 0 | 1/12 oscillator frequency |
| 0 | 1 | 1/4 oscillator frequency |
| 1 | 0 | Timer 0 overflow |
| 1 | 1 | External Input at ECI pin |

In the CMOD SFR are three additional bits associated with the PCA. They are CIDL which allows the PCA to stop during idle mode, WDTE which enables or disables the watchdog function on module 4, and ECF which when set causes an interrupt and the PCA overflow flag CF (in the CCON SFR) to be set when the PCA timer overflows. These functions are shown in Figure 15.

The watchdog timer function is implemented in module 4 (see Figure 24).

The CCON SFR contains the run control bit for the PCA and the flags for the PCA timer (CF) and each module (refer to Figure 18). To run the PCA the CR bit (CCON.6) must be set by software. The PCA is shut off by clearing this bit. The CF bit (CCON.7) is set when the PCA counter overflows and an interrupt will be generated if the ECF bit in the CMOD register is set, The CF bit can only be cleared by software. Bits 0 through 4 of the CCON register are the flags for the modules (bit 0 for module 0, bit 1 for module 1, etc.) and are set by hardware when either a match or a capture occurs. These flags also can only be cleared by software. The PCA interrupt system shown in Figure 16.

Each module in the PCA has a special function register associated with it. These registers are: CCAPM0 for module 0, CCAPM1 for module 1, etc. (see Figure 19). The registers contain the bits that control the mode that each module will operate in. The ECCF bit (CCAPMn.0 where n=0, 1, 2, 3, or 4 depending on the module) enables the CCF flag in the CCON SFR to generate an interrupt when a match or compare occurs in the associated module. PWM (CCAPMn.1) enables the pulse width modulation mode. The TOG bit (CCAPMn.2) when set causes the CEX output associated with the module to toggle when there is a match between the PCA counter and the module's capture/compare register. The match bit MAT (CCAPMn.3) when set will cause the CCFn bit in the CCON register to be set when there is a match between the PCA counter and the module's capture/compare register.

The next two bits CAPN (CCAPMn.4) and CAPP (CCAPMn.5) determine the edge that a capture input will be active on. The CAPN bit enables the negative edge, and the CAPP bit enables the positive edge. If both bits are set both edges will be enabled and a capture will occur for either transition. The last bit in the register ECOM (CCAPMn.6) when set enables the comparator function. Figure 20 shows the CCAPMn settings for the various PCA functions.

There are two additional registers associated with each of the PCA modules. They are CCAPnH and CCAPnL and these are the registers that store the 16-bit count when a capture occurs or a compare should occur. When a module is used in the PWM mode these registers are used to control the duty cycle of the output.

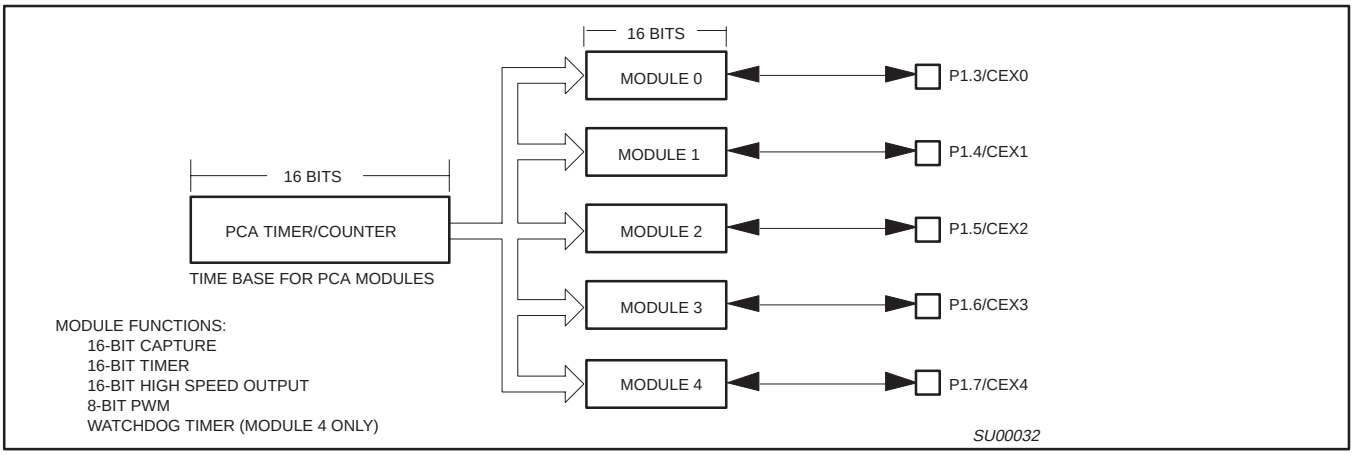


**Figure 14. Programmable Counter Array (PCA)**

**(8XC51FX and 8XC51RX+ ONLY)**

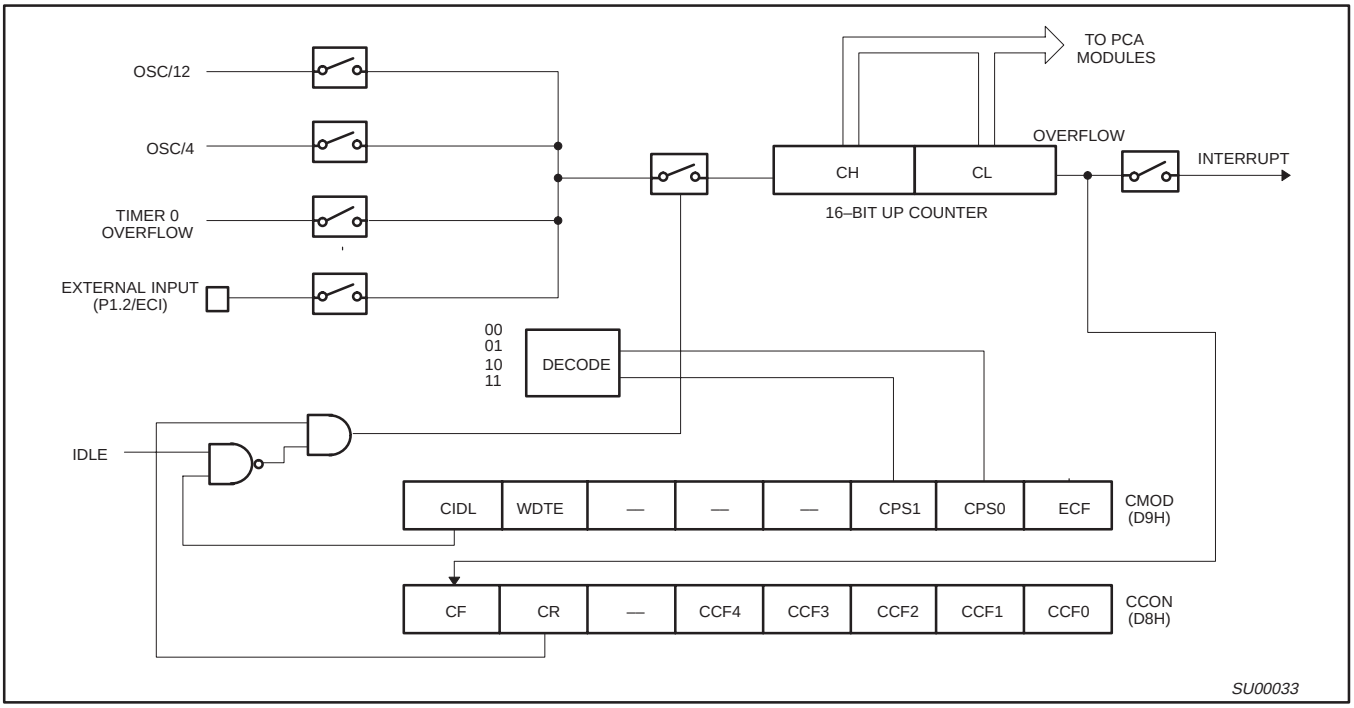


**Figure 15. PCA Timer/Counter**

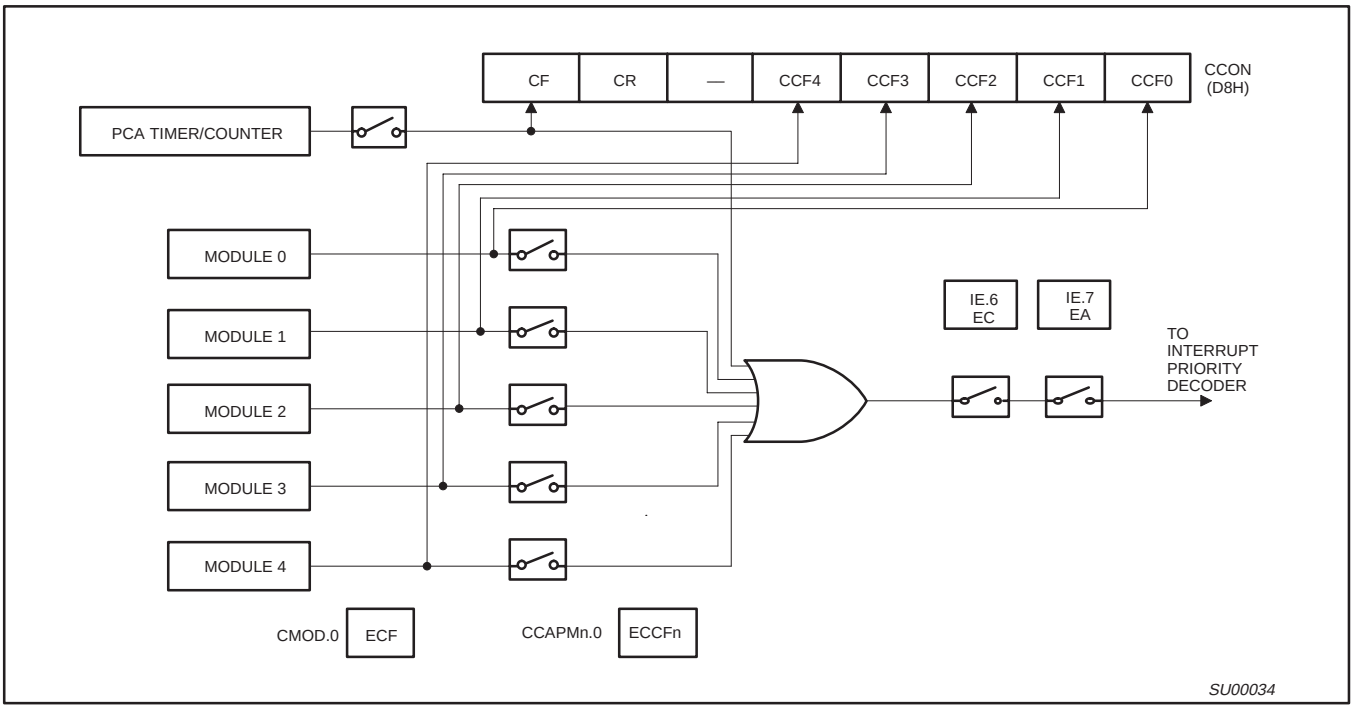


**Figure 16. PCA Interrupt System**

## (8XC51FX and 8XC51RX+ ONLY)

**CMOD** Address = OD9H — Reset Value = 00XX X000B

| | CIDL | WDTE | – | – | – | CPS1 | CPS0 | ECF |
|---|---|---|---|---|---|---|---|---|
| Bit: | 7 | 6 | 5 | 4 | 3 | 2 | 1 | 0 |

| Symbol | Function |
|---|---|
| **CIDL** | Counter Idle control: CIDL = 0 programs the PCA Counter to continue functioning during idle Mode. CIDL = 1 programs it to be gated off during idle. |
| **WDTE** | Watchdog Timer Enable: WDTE = 0 disables Watchdog Timer function on PCA Module 4. WDTE = 1 enables it. |
| – | Not implemented, reserved for future use.* |
| **CPS1** | PCA Count Pulse Select bit 1. |
| **CPS0** | PCA Count Pulse Select bit 0. |

| CPS1 | CPS0 | Selected PCA Input** | |
|---|---|---|---|
| 0 | 0 | 0 | Internal clock, $f_{OSC} \div 12$ |
| 0 | 1 | 1 | Internal clock, $f_{OSC} \div 4$ |
| 1 | 0 | 2 | Timer 0 overflow |
| 1 | 1 | 3 | External clock at ECI/P1.2 pin (max. rate = $f_{OSC} \div 8$) |

| | |
|---|---|
| **ECF** | PCA Enable Counter Overflow interrupt: ECF = 1 enables CF bit in CCON to generate an interrupt. ECF = 0 disables that function of CF. |

**NOTE:**
* User software should not write 1s to reserved bits. These bits may be used in future 8051 family products to invoke new features. In that case, the reset or inactive value of the new bit will be 0, and its active value will be 1. The value read from a reserved bit is indeterminate.
** $f_{OSC}$ = oscillator frequency

*SU00035*

**Figure 17. CMOD: PCA Counter Mode Register**

**CCON** Address = OD8H — Reset Value = 00X0 0000B

Bit Addressable

| | CF | CR | – | CCF4 | CCF3 | CCF2 | CCF1 | CCF0 |
|---|---|---|---|---|---|---|---|---|
| Bit: | 7 | 6 | 5 | 4 | 3 | 2 | 1 | 0 |

| Symbol | Function |
|---|---|
| **CF** | PCA Counter Overflow flag. Set by hardware when the counter rolls over. CF flags an interrupt if bit ECF in CMOD is set. CF may be set by either hardware or software but can only be cleared by software. |
| **CR** | PCA Counter Run control bit. Set by software to turn the PCA counter on. Must be cleared by software to turn the PCA counter off. |
| – | Not implemented, reserved for future use*. |
| **CCF4** | PCA Module 4 interrupt flag. Set by hardware when a match or capture occurs. Must be cleared by software. |
| **CCF3** | PCA Module 3 interrupt flag. Set by hardware when a match or capture occurs. Must be cleared by software. |
| **CCF2** | PCA Module 2 interrupt flag. Set by hardware when a match or capture occurs. Must be cleared by software. |
| **CCF1** | PCA Module 1 interrupt flag. Set by hardware when a match or capture occurs. Must be cleared by software. |
| **CCF0** | PCA Module 0 interrupt flag. Set by hardware when a match or capture occurs. Must be cleared by software. |

**NOTE:**
* User software should not write 1s to reserved bits. These bits may be used in future 8051 family products to invoke new features. In that case, the reset or inactive value of the new bit will be 0, and its active value will be 1. The value read from a reserved bit is indeterminate.

*SU00036*

**Figure 18. CCON: PCA Counter Control Register**

## (8XC51FX and 8XC51RX+ ONLY)

**CCAPMn** Address

| | |
|---|---|
| CCAPM0 | 0DAH |
| CCAPM1 | 0DBH |
| CCAPM2 | 0DCH |
| CCAPM3 | 0DDH |
| CCAPM4 | 0DEH |

Reset Value = X000 0000B

Not Bit Addressable

| | – | ECOMn | CAPPn | CAPNn | MATn | TOGn | PWMn | ECCFn |
|---|---|---|---|---|---|---|---|---|
| Bit: | 7 | 6 | 5 | 4 | 3 | 2 | 1 | 0 |

| Symbol | Function |
|---|---|
| **–** | Not implemented, reserved for future use*. |
| **ECOMn** | Enable Comparator. ECOMn = 1 enables the comparator function. |
| **CAPPn** | Capture Positive, CAPPn = 1 enables positive edge capture. |
| **CAPNn** | Capture Negative, CAPNn = 1 enables negative edge capture. |
| **MATn** | Match. When MATn = 1, a match of the PCA counter with this module's compare/capture register causes the CCFn bit in CCON to be set, flagging an interrupt. |
| **TOGn** | Toggle. When TOGn = 1, a match of the PCA counter with this module's compare/capture register causes the CEXn pin to toggle. |
| **PWMn** | Pulse Width Modulation Mode. PWMn = 1 enables the CEXn pin to be used as a pulse width modulated output. |
| **ECCFn** | Enable CCF interrupt. Enables compare/capture flag CCFn in the CCON register to generate an interrupt. |

**NOTE:**
*User software should not write 1s to reserved bits. These bits may be used in future 8051 family products to invoke new features. In that case, the reset or inactive value of the new bit will be 0, and its active value will be 1. The value read from a reserved bit is indeterminate.

*SU00037*

**Figure 19. CCAPMn: PCA Modules Compare/Capture Registers**

| – | ECOMn | CAPPn | CAPNn | MATn | TOGn | PWMn | ECCFn | MODULE FUNCTION |
|---|---|---|---|---|---|---|---|---|
| X | 0 | 0 | 0 | 0 | 0 | 0 | 0 | No operation |
| X | X | 1 | 0 | 0 | 0 | 0 | X | 16-bit capture by a positive-edge trigger on CEXn |
| X | X | 0 | 1 | 0 | 0 | 0 | X | 16-bit capture by a negative trigger on CEXn |
| X | X | 1 | 1 | 0 | 0 | 0 | X | 16-bit capture by a transition on CEXn |
| X | 1 | 0 | 0 | 1 | 0 | 0 | X | 16-bit Software Timer |
| X | 1 | 0 | 0 | 1 | 1 | 0 | X | 16-bit High Speed Output |
| X | 1 | 0 | 0 | 0 | 0 | 1 | 0 | 8-bit PWM |
| X | 1 | 0 | 0 | 1 | X | 0 | X | Watchdog Timer |

**Figure 20. PCA Module Modes (CCAPMn Register)**

**PCA Capture Mode**
To use one of the PCA modules in the capture mode either one or both of the CCAPM bits CAPN and CAPP for that module must be set. The external CEX input for the module (on port 1) is sampled for a transition. When a valid transition occurs the PCA hardware loads the value of the PCA counter registers (CH and CL) into the module's capture registers (CCAPnL and CCAPnH). If the CCFn bit for the module in the CCON SFR and the ECCFn bit in the CCAPMn SFR are set then an interrupt will be generated. Refer to Figure 21.

**16-bit Software Timer Mode**
The PCA modules can be used as software timers by setting both the ECOM and MAT bits in the modules CCAPMn register. The PCA timer will be compared to the module's capture registers and when a match occurs an interrupt will occur if the CCFn (CCON SFR) and the ECCFn (CCAPMn SFR) bits for the module are both set (see Figure 22).

**High Speed Output Mode**
In this mode the CEX output (on port 1) associated with the PCA module will toggle each time a match occurs between the PCA counter and the module's capture registers. To activate this mode the TOG, MAT, and ECOM bits in the module's CCAPMn SFR must be set (see Figure 23).

**Pulse Width Modulator Mode**
All of the PCA modules can be used as PWM outputs. Figure 24 shows the PWM function. The frequency of the output depends on the source for the PCA timer. All of the modules will have the same frequency of output because they all share the PCA timer. The duty cycle of each module is independently variable using the module's capture register CCAPLn. When the value of the PCA CL SFR is less than the value in the module's CCAPLn SFR the output will be low, when it is equal to or greater than the output will be high. When CL overflows from FF to 00, CCAPLn is reloaded with the value in CCAPHn. the allows updating the PWM without glitches. The PWM and ECOM bits in the module's CCAPMn register must be set to enable the PWM mode.

**(8XC51FX and 8XC51RX+ ONLY)**

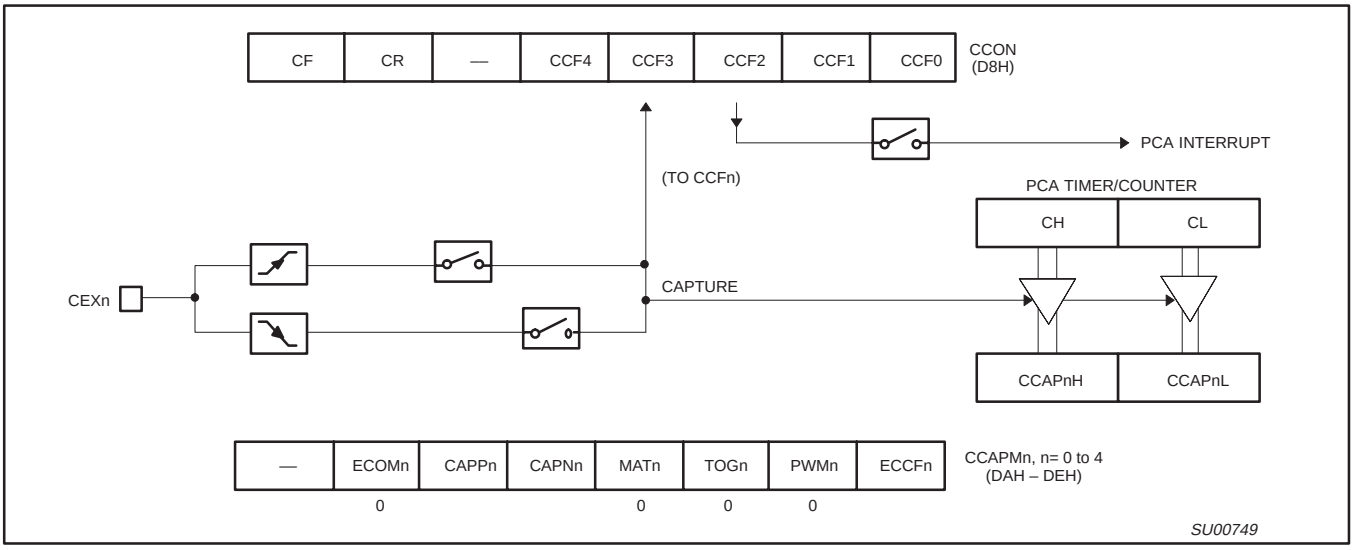


**Figure 21. PCA Capture Mode**

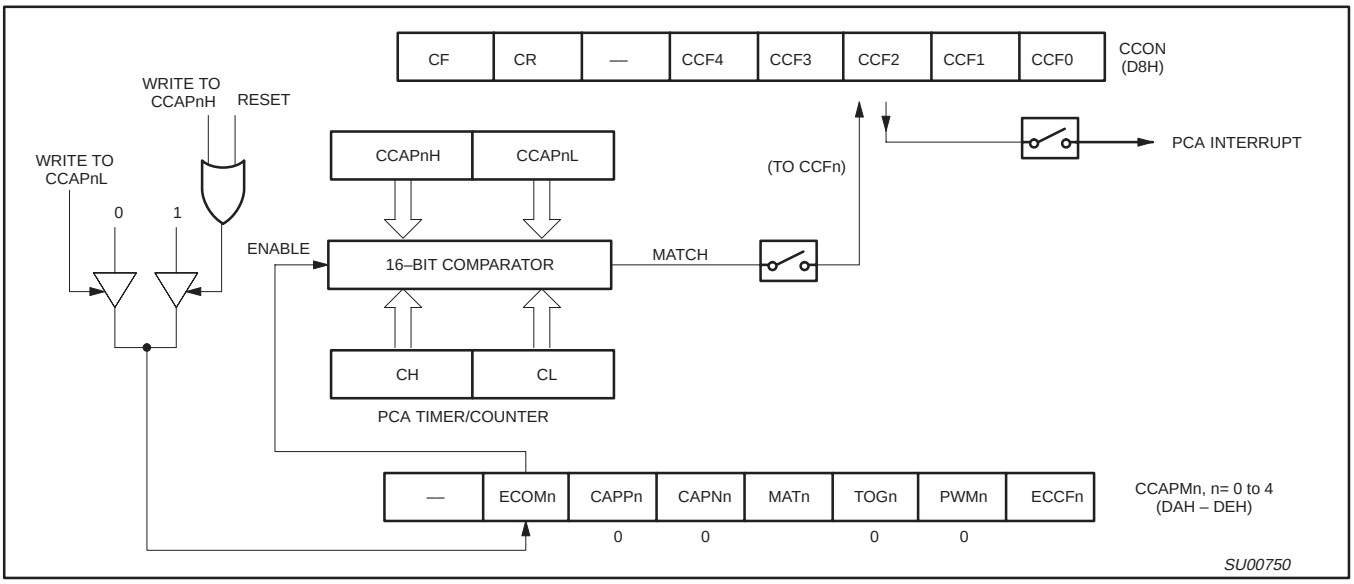


**Figure 22. PCA Compare Mode**

**(8XC51FX and 8XC51RX+ ONLY)**

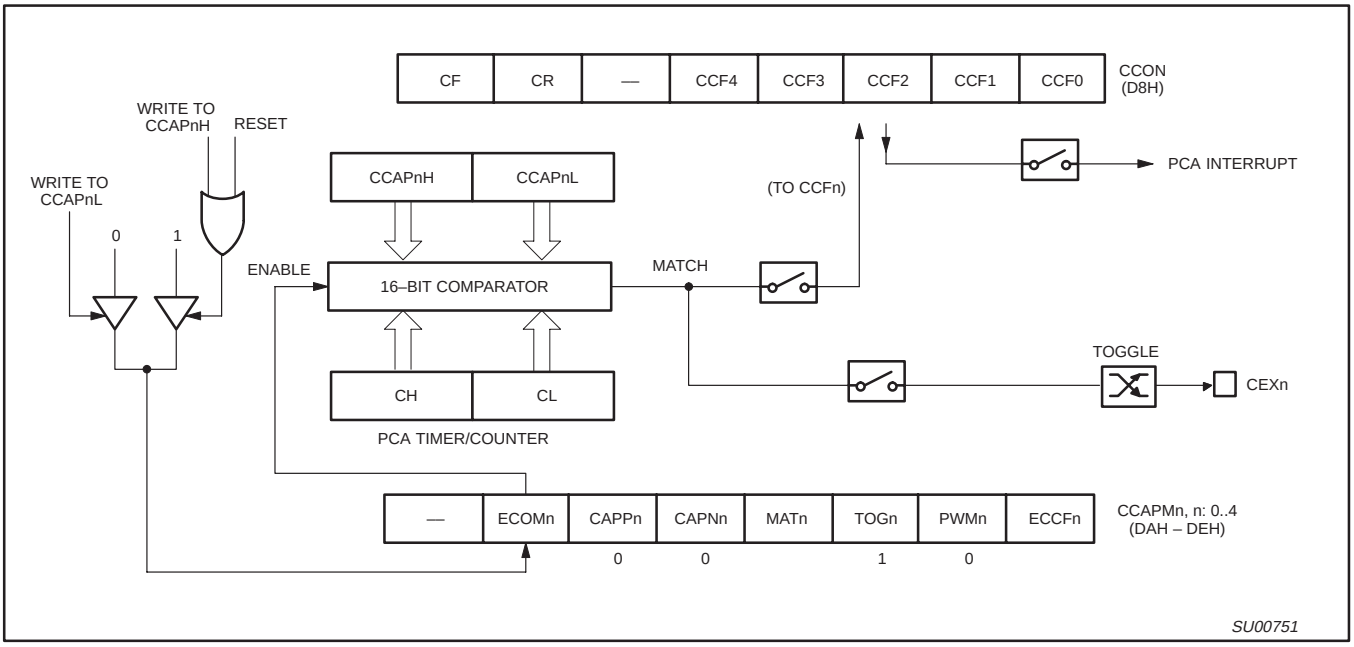


**Figure 23. PCA High Speed Output Mode**

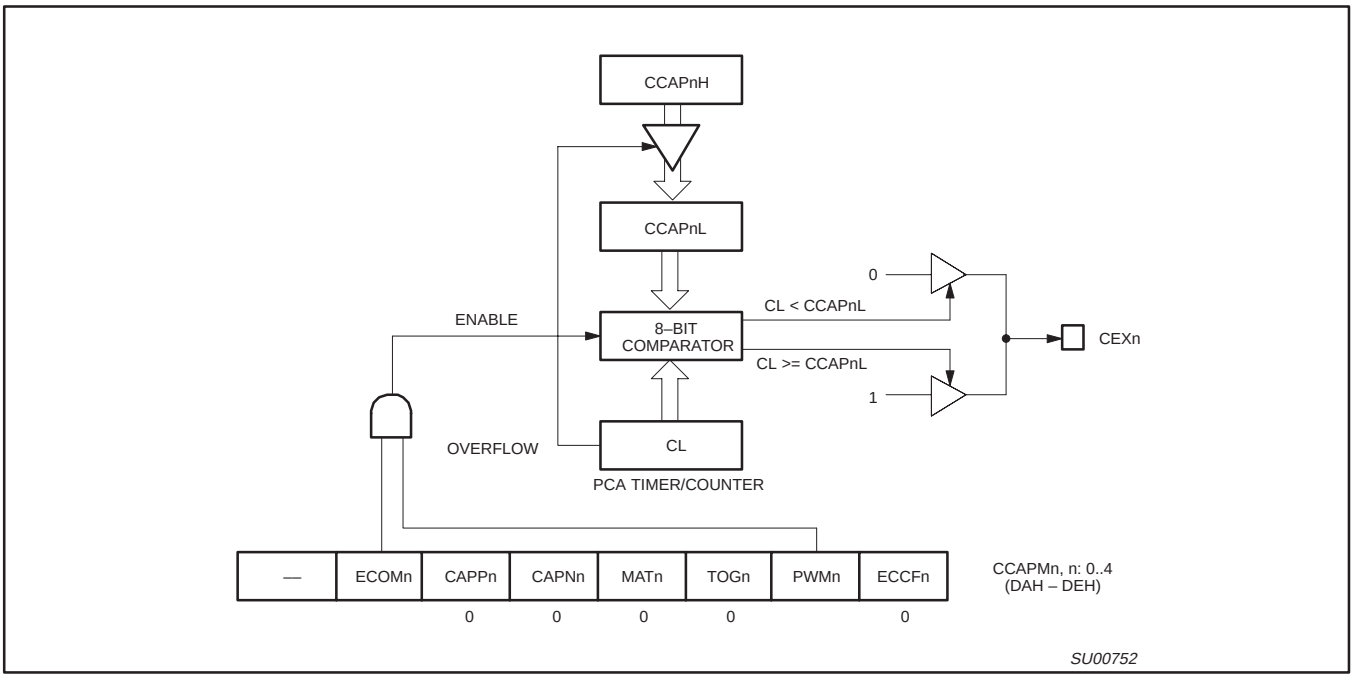


**Figure 24. PCA PWM Mode**

## (8XC51FX and 8XC51RX+ ONLY)

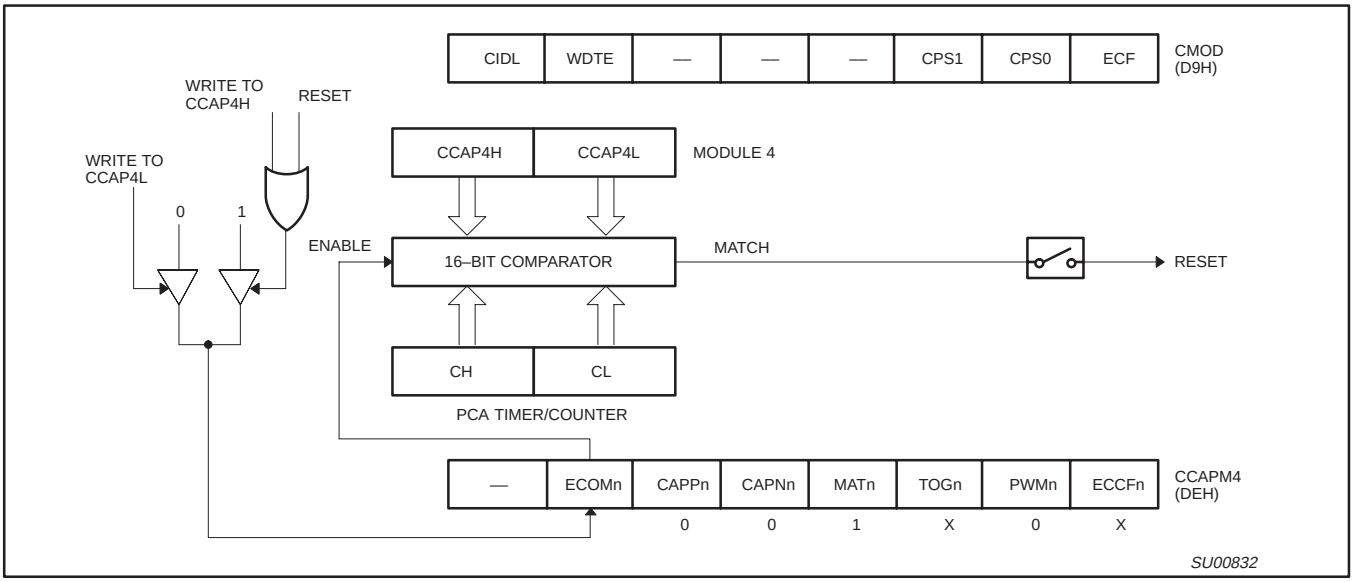


**Figure 25. PCA Watchdog Timer m(Module 4 only)**

**PCA Watchdog Timer**

An on-board watchdog timer is available with the PCA to improve the reliability of the system without increasing chip count. Watchdog timers are useful for systems that are susceptible to noise, power glitches, or electrostatic discharge. Module 4 is the only PCA module that can be programmed as a watchdog. However, this module can still be used for other modes if the watchdog is not needed.

Figure 25 shows a diagram of how the watchdog works. The user pre-loads a 16-bit value in the compare registers. Just like the other compare modes, this 16-bit value is compared to the PCA timer value. If a match is allowed to occur, an internal reset will be generated. This will not cause the RST pin to be driven high.

In order to hold off the reset, the user has three options:

1. periodically change the compare value so it will never match the PCA timer,
2. periodically change the PCA timer value so it will never match the compare values, or
3. disable the watchdog by clearing the WDTE bit before a match occurs and then re-enable it.

The first two options are more reliable because the watchdog timer is never disabled as in option #3. If the program counter ever goes astray, a match will eventually occur and cause an internal reset. The second option is also not recommended if other PCA modules are being used. Remember, the PCA timer is the time base for **all** modules; changing the time base for other modules would not be a good idea. Thus, in most applications the first solution is the best option.

Figure 26 shows the code for initializing the watchdog timer. Module 4 can be configured in either compare mode, and the WDTE bit in CMOD must also be set. The user's software then must periodically change (CCAP4H,CCAP4L) to keep a match from occurring with the PCA timer (CH,CL). This code is given in the WATCHDOG routine in Figure 26.

This routine should not be part of an interrupt service routine, because if the program counter goes astray and gets stuck in an infinite loop, interrupts will still be serviced and the watchdog will keep getting reset. Thus, the purpose of the watchdog would be defeated. Instead, call this subroutine from the main program within $2^{16}$ count of the PCA timer.

**(8XC51FX and 8XC51RX+ ONLY)**

```
INIT_WATCHDOG:
   MOV CCAPM4, #4CH         ; Module 4 in compare mode
   MOV CCAP4L, #0FFH        ; Write to low byte first
   MOV CCAP4H, #0FFH        ; Before PCA timer counts up to
                            ; FFFF Hex, these compare values
                            ; must be changed
   ORL CMOD, #40H           ; Set the WDTE bit to enable the
                            ; watchdog timer without changing
                            ; the other bits in CMOD
;
;*******************************************************************
;
; Main program goes here, but CALL WATCHDOG periodically.
;
;*******************************************************************
;
WATCHDOG:
   CLR EA                   ; Hold off interrupts
   MOV CCAP4L, #00          ; Next compare value is within
   MOV CCAP4H, CH           ; 255 counts of the current PCA
   SETB EA                  ; timer value
   RET
```

**Figure 26. PCA Watchdog Timer Initialization Code**

## (8XC51RX+ ONLY)

### Expanded Data RAM Addressing (8XC51RX+ ONLY)

The 8XC51RX+ have internal data memory that is mapped into four separate segments: the lower 128 bytes of RAM, upper 128 bytes of RAM, 128 bytes Special Function Register (SFR), and 256 bytes (768 for RD+) expanded RAM (EXTRAM).

The four segments are:

1. The Lower 128 bytes of RAM (addresses 00H to 7FH) are directly and indirectly addressable.
2. The Upper 128 bytes of RAM (addresses 80H to FFH) are indirectly addressable only.
3. The Special Function Registers, SFRs, (addresses 80H to FFH) are directly addressable only.
4. The 256-bytes (768 for RD+) expanded RAM ((EXTRAM (256-bytes) 00H–FFH)) and ((EXTRAM (768-bytes for RD+) 00H – 2FFH)) are indirectly accessed by move external instruction, MOVX, and with the EXTRAM bit cleared, see Figure 27.

The Lower 128 bytes can be accessed by either direct or indirect addressing. The Upper 128 bytes can be accessed by indirect addressing only. The Upper 128 bytes occupy the same address space as the SFR. That means they have the same address, but are physically separate from SFR space.

When an instruction accesses an internal location above address 7FH, the CPU knows whether the access is to the upper 128 bytes of data RAM or to SFR space by the addressing mode used in the instruction. Instructions that use direct addressing access SFR space. For example:

MOV 0A0H,#data

accesses the SFR at location 0A0H (which is P2). Instructions that use indirect addressing access the Upper 128 bytes of data RAM. For example:

MOV @R0,#data

where R0 contains 0A0H, accesses the data byte at address 0A0H, rather than P2 (whose address is 0A0H).
The EXTRAM can be accessed by indirect addressing, with EXTRAM bit cleared and MOVX instructions. This part of memory is physically located on-chip, logically occupies the first 256-bytes (768 for RD+) of external data memory.

With EXTRAM = 0, the EXTRAM is indirectly addressed, using the MOVX instruction in combination with any of the registers R0, R1 of the selected bank or DPTR. An access to EXTRAM will not affect ports P0, P3.6 (WR#) and P3.7 (RD#). P2 SFR is output during external addressing. For example, with EXTRAM = 0,

MOVX @R0,#data

where R0 contains 0A0H, access the EXTRAM at address 0A0H rather than external memory. An access to external data memory locations higher than FFH (2FF for RD+) (i.e., 0100H to FFFFH) will be performed with the MOVX DPTR instructions in the same way as in the standard 80C51, so with P0 and P2 as data/address bus, and P3.6 and P3.7 as write and read timing signals. Refer to Figure 28.

With EXTRAM = 1, MOVX @Ri and MOVX @DPTR will be similar to the standard 80C51. MOVX @ Ri will provide an 8-bit address multiplexed with data on Port 0 and any output port pins can be used to output higher order address bits. This is to provide the external paging capability. MOVX @DPTR will generate a 16-bit address. Port 2 outputs the high-order eight address bits (the contents of DPH) while Port 0 multiplexes the low-order eight address bits (DPL) with data. MOVX @Ri and MOVX @DPTR will generate either read or write signals on P3.6 (#WR) and P3.7 (#RD).

The stack pointer (SP) may be located anywhere in the 256 bytes RAM (lower and upper RAM) internal data memory. The stack may not be located in the EXTRAM.

**AUXR** Address = 8EH — Reset Value = xxxx xx00B

Not Bit Addressable

| | | | | | | | | |
|---|---|---|---|---|---|---|---|---|
| | — | — | — | — | — | — | **EXTRAM** | **AO** |
| Bit: | 7 | 6 | 5 | 4 | 3 | 2 | 1 | 0 |

| Symbol | Function |
|---|---|
| **AO** | Disable/Enable ALE |
| | **AO** — **Operating Mode**<br>0 — ALE is emitted at a constant rate of 1/6 the oscillator frequency.<br>1 — ALE is active only during a MOVX or MOVC instruction. |
| **EXTRAM** | Internal/External RAM access using MOVX @Ri/@DPTR |
| | **EXTRAM** — **Operating Mode**<br>0 — Internal ERAM (00H–FFH) (00H–2FFH for RD+) access using MOVX @Ri/@DPTR<br>1 — External data memory access. |
| — | Not implemented, reserved for future use*. |

**NOTE:**
*User software should not write 1s to reserved bits. These bits may be used in future 8051 family products to invoke new features. In that case, the reset or inactive value of the new bit will be 0, and its active value will be 1. The value read from a reserved bit is indeterminate.

*SU01003*

**Figure 27. AUXR: Auxiliary Register (RX+ only)**

**(8XC51RX+ ONLY)**

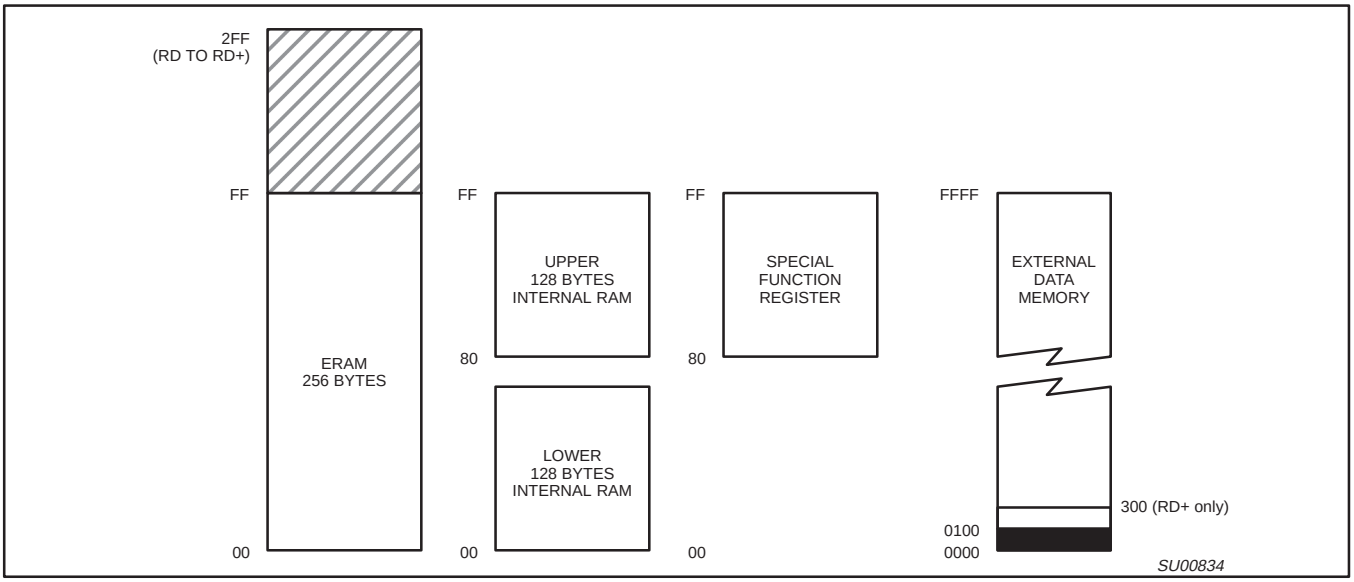


**Figure 28. Internal and External Data Memory Address Space with EXTRAM = 0**

## HARDWARE WATCHDOG TIMER (ONE-TIME ENABLED WITH RESET-OUT FOR 89C51RC+/RD+)

The WDT is intended as a recovery method in situations where the CPU may be subjected to software upset. The WDT consists of a 14-bit counter and the WatchDog Timer reset (WDTRST) SFR. The WDT is disabled at reset. To enable the WDT, user must write 01EH and 0E1H in sequence to the WDTRST, SFR location 0A6H. When WDT is enabled, it will increment every machine cycle while the oscillator is running and there is no way to disable the WDT except through reset (either hardware reset or WDT overflow reset). When WDT overflows, it will drive an output reset HIGH pulse at the RST-pin.

### Using the WDT

To enable the WDT, user must write 01EH and 0E1H in sequence to the WDTRST, SFR location 0A6H. When WDT is enabled, the user needs to service it by writing to 01EH and 0E1H to WDTRST to avoid WDT overflow. The 14-bit counter overflows when it reaches 16383 (3FFFH) and this will reset the device. When using the WDT, a 1Kohm resistor must be inserted between RST of the device and the Power On Reset circuitry. When WDT is enabled, it will increment every machine cycle while the oscillator is running. This means the user must reset the WDT at least every 16383 machine cycles. To reset the WDT, the user must write 01EH and 0E1H to WDTRST. WDTRST is a write only register. The WDT counter cannot be read or written. When WDT overflows, it will generate an output RESET pulse at the reset pin. The RESET pulse duration is $98 \times T_{OSC}$, where $T_{OSC} = 1/f_{OSC}$. To make the best use of the WDT, it should be serviced in those sections of code that will periodically be executed within the time required to prevent a WDT reset.

In applications using the Hardware Watchdog Timer of the P8xC51RD+, a series resistor (1KΩ ±20%) needs to be included between the reset pin and any external components. Without this resistor the watchdog timer will not function.

## ABSOLUTE MAXIMUM RATINGS[1, 2, 3]

| PARAMETER | RATING | UNIT |
|---|---|---|
| Operating temperature under bias | 0 to +70 or –40 to +85 | °C |
| Storage temperature range | –65 to +150 | °C |
| Voltage on $\overline{EA}/V_{PP}$ pin to $V_{SS}$ | 0 to +13.0 | V |
| Voltage on any other pin to $V_{SS}$ | –0.5 to +6.5 | V |
| Maximum $I_{OL}$ per I/O pin | 15 | mA |
| Power dissipation (based on package heat transfer limitations, not device power consumption) | 1.5 | W |

**NOTES:**
1. Stresses above those listed under Absolute Maximum Ratings may cause permanent damage to the device. This is a stress rating only and functional operation of the device at these or any conditions other than those described in the AC and DC Electrical Characteristics section of this specification is not implied.
2. This product includes circuitry specifically designed for the protection of its internal devices from the damaging effects of excessive static charge. Nonetheless, it is suggested that conventional precautions be taken to avoid applying greater than the rated maximum.
3. Parameters are valid over operating temperature range unless otherwise specified. All voltages are with respect to $V_{SS}$ unless otherwise noted.

## AC ELECTRICAL CHARACTERISTICS

$T_{amb}$ = 0°C to +70°C or –40°C to +85°C

| SYMBOL | FIGURE | PARAMETER | CLOCK FREQUENCY RANGE –f | | UNIT |
|---|---|---|---|---|---|
| | | | MIN | MAX | |
| $1/t_{CLCL}$ | 33 | Oscillator frequency<br>Speed versions : 4:5:S (16MHz)<br>I:J:U (33MHz) | <br>0<br>0 | <br>16<br>33 | <br>MHz<br>MHz |

## DC ELECTRICAL CHARACTERISTICS

$T_{amb}$ = 0°C to +70°C or –40°C to +85°C, $V_{CC}$ = 2.7V to 5.5V, $V_{SS}$ = 0V (16MHz devices)

| SYMBOL | PARAMETER | TEST CONDITIONS | LIMITS | | | UNIT |
|---|---|---|---|---|---|---|
| | | | MIN | TYP[1] | MAX | |
| $V_{IL}$ | Input low voltage | 4.0V < $V_{CC}$ < 5.5V | –0.5 | | 0.2$V_{CC}$–0.1 | V |
| | | 2.7V<$V_{CC}$< 4.0V | –0.5 | | 0.7 | V |
| $V_{IH}$ | Input high voltage (ports 0, 1, 2, 3, $\overline{EA}$) | | 0.2$V_{CC}$+0.9 | | $V_{CC}$+0.5 | V |
| $V_{IH1}$ | Input high voltage, XTAL1, RST | | 0.7$V_{CC}$ | | $V_{CC}$+0.5 | V |
| $V_{OL}$ | Output low voltage, ports 1, 2 [8] | $V_{CC}$ = 2.7V<br>$I_{OL}$ = 1.6mA[2] | | | 0.4 | V |
| $V_{OL1}$ | Output low voltage, port 0, ALE, $\overline{PSEN}$[8, 7] | $V_{CC}$ = 2.7V<br>$I_{OL}$ = 3.2mA[2] | | | 0.4 | V |
| $V_{OH}$ | Output high voltage, ports 1, 2, 3 [3] | $V_{CC}$ = 2.7V<br>$I_{OH}$ = –20µA | $V_{CC}$ – 0.7 | | | V |
| | | $V_{CC}$ = 4.5V<br>$I_{OH}$ = –30µA | $V_{CC}$ – 0.7 | | | V |
| $V_{OH1}$ | Output high voltage (port 0 in external bus mode), ALE[9], $\overline{PSEN}$[3] | $V_{CC}$ = 2.7V<br>$I_{OH}$ = –3.2mA | $V_{CC}$ – 0.7 | | | V |
| $I_{IL}$ | Logical 0 input current, ports 1, 2, 3 | $V_{IN}$ = 0.4V | –1 | | –50 | µA |
| $I_{TL}$ | Logical 1-to-0 transition current, ports 1, 2, 3[6] | $V_{IN}$ = 2.0V<br>See note 4 | | | –650 | µA |
| $I_{LI}$ | Input leakage current, port 0 | 0.45 < $V_{IN}$ < $V_{CC}$ – 0.3 | | | ±10 | µA |
| $I_{CC}$ | Power supply current (see Figure 36): | See note 5 | | | | |
| | Active mode @ 16MHz (all except 8XC51RD+) | | | | 15 | mA |
| | 87C51RD+ | | | | 16 | mA |
| | Idle mode @ 16MHz | | | | 4 | mA |
| | Power-down mode or clock stopped (see Figure 40 for conditions) | $T_{amb}$ = 0°C to 70°C | | 3 | 50 | µA |
| | | $T_{amb}$ = –40°C to +85°C | | | 75 | µA |
| $R_{RST}$ | Internal reset pull-down resistor | | 40 | | 225 | kΩ |
| $C_{IO}$ | Pin capacitance[10] (except $\overline{EA}$) | | | | 15 | pF |

**NOTES:**

1. Typical ratings are not guaranteed. The values listed are at room temperature, 5V.
2. Capacitive loading on ports 0 and 2 may cause spurious noise to be superimposed on the $V_{OL}$s of ALE and ports 1 and 3. The noise is due to external bus capacitance discharging into the port 0 and port 2 pins when these pins make 1-to-0 transitions during bus operations. In the worst cases (capacitive loading > 100pF), the noise pulse on the ALE pin may exceed 0.8V. In such cases, it may be desirable to qualify ALE with a Schmitt Trigger, or use an address latch with a Schmitt Trigger STROBE input. $I_{OL}$ can exceed these conditions provided that no single output sinks more than 5mA and no more than two outputs exceed the test conditions.
3. Capacitive loading on ports 0 and 2 may cause the $V_{OH}$ on ALE and $\overline{PSEN}$ to momentarily fall below the $V_{CC}$–0.7 specification when the address bits are stabilizing.
4. Pins of ports 1, 2 and 3 source a transition current when they are being externally driven from 1 to 0. The transition current reaches its maximum value when $V_{IN}$ is approximately 2V.
5. See Figures 37 through 40 for $I_{CC}$ test conditions, and Figure 36 for $I_{CC}$ vs Freq.
   Active mode: $I_{CC}$ = (0.9 × FREQ. + 1.1)mA for all devices except 8XC51RD+; 8XC51RD+ $I_{CC}$ = (0.9 x Freq +2.1) mA
   Idle mode: $I_{CC}$ = (0.18 × FREQ. +1.01)mA
6. This value applies to $T_{amb}$ = 0°C to +70°C. For $T_{amb}$ = –40°C to +85°C, $I_{TL}$ = –750µA.
7. Load capacitance for port 0, ALE, and $\overline{PSEN}$ = 100pF, load capacitance for all other outputs = 80pF.
8. Under steady state (non-transient) conditions, $I_{OL}$ must be externally limited as follows:
   Maximum $I_{OL}$ per port pin: 15mA (*NOTE: This is 85°C specification.)
   Maximum $I_{OL}$ per 8-bit port: 26mA
   Maximum total $I_{OL}$ for all outputs: 71mA
   If $I_{OL}$ exceeds the test condition, $V_{OL}$ may exceed the related specification. Pins are not guaranteed to sink current greater than the listed test conditions.
9. ALE is tested to $V_{OH1}$, except when ALE is off then $V_{OH}$ is the voltage specification.
10. Pin capacitance is characterized but not tested. Pin capacitance is less than 25pF. Pin capacitance of ceramic package is less than 15pF (except $\overline{EA}$ is 25pF).

## DC ELECTRICAL CHARACTERISTICS

$T_{amb}$ = 0°C to +70°C or –40°C to +85°C, 33MHz devices; 5V ±10%; $V_{SS}$ = 0V

| SYMBOL | PARAMETER | TEST CONDITIONS | LIMITS | | | UNIT |
|---|---|---|---|---|---|---|
| | | | MIN | TYP[1] | MAX | |
| $V_{IL}$ | Input low voltage | 4.5V < $V_{CC}$ < 5.5V | –0.5 | | $0.2V_{CC}$–0.1 | V |
| $V_{IH}$ | Input high voltage (ports 0, 1, 2, 3, $\overline{EA}$) | | $0.2V_{CC}$+0.9 | | $V_{CC}$+0.5 | V |
| $V_{IH1}$ | Input high voltage, XTAL1, RST | | $0.7V_{CC}$ | | $V_{CC}$+0.5 | V |
| $V_{OL}$ | Output low voltage, ports 1, 2, 3 [8] | $V_{CC}$ = 4.5V<br>$I_{OL}$ = 1.6mA[2] | | | 0.4 | V |
| $V_{OL1}$ | Output low voltage, port 0, ALE, $\overline{PSEN}$ [7, 8] | $V_{CC}$ = 4.5V<br>$I_{OL}$ = 3.2mA[2] | | | 0.4 | V |
| $V_{OH}$ | Output high voltage, ports 1, 2, 3 [3] | $V_{CC}$ = 4.5V<br>$I_{OH}$ = –30µA | $V_{CC}$ – 0.7 | | | V |
| $V_{OH1}$ | Output high voltage (port 0 in external bus mode), ALE[9], $\overline{PSEN}$[3] | $V_{CC}$ = 4.5V<br>$I_{OH}$ = –3.2mA | $V_{CC}$ – 0.7 | | | V |
| $I_{IL}$ | Logical 0 input current, ports 1, 2, 3 | $V_{IN}$ = 0.4V | –1 | | –50 | µA |
| $I_{TL}$ | Logical 1-to-0 transition current, ports 1, 2, 3[6] | $V_{IN}$ = 2.0V<br>See note 4 | | | –650 | µA |
| $I_{LI}$ | Input leakage current, port 0 | 0.45 < $V_{IN}$ < $V_{CC}$ – 0.3 | | | ±10 | µA |
| $I_{CC}$ | Power supply current (see Figure 36):<br>Active mode (see Note 5)<br>Idle mode (see Note 5)<br>Power-down mode or clock stopped (see Figure 40 for conditions) | See note 5<br><br><br>$T_{amb}$ = 0°C to 70°C<br>$T_{amb}$ = –40°C to +85°C | | <br><br><br>3 | <br><br><br>50<br>75 | <br><br><br>µA<br>µA |
| $R_{RST}$ | Internal reset pull-down resistor | | 40 | | 225 | kΩ |
| $C_{IO}$ | Pin capacitance[10] (except $\overline{EA}$) | | | | 15 | pF |

**NOTES:**

1. Typical ratings are not guaranteed. The values listed are at room temperature, 5V.
2. Capacitive loading on ports 0 and 2 may cause spurious noise to be superimposed on the $V_{OL}$s of ALE and ports 1 and 3. The noise is due to external bus capacitance discharging into the port 0 and port 2 pins when these pins make 1-to-0 transitions during bus operations. In the worst cases (capacitive loading > 100pF), the noise pulse on the ALE pin may exceed 0.8V. In such cases, it may be desirable to qualify ALE with a Schmitt Trigger, or use an address latch with a Schmitt Trigger STROBE input. $I_{OL}$ can exceed these conditions provided that no single output sinks more than 5mA and no more than two outputs exceed the test conditions.
3. Capacitive loading on ports 0 and 2 may cause the $V_{OH}$ on ALE and $\overline{PSEN}$ to momentarily fall below the $V_{CC}$–0.7 specification when the address bits are stabilizing.
4. Pins of ports 1, 2 and 3 source a transition current when they are being externally driven from 1 to 0. The transition current reaches its maximum value when $V_{IN}$ is approximately 2V.
5. See Figures 37 through 40 for $I_{CC}$ test conditions and Figure 36 for $I_{CC}$ vs Freq.
   Active mode: $I_{CC(MAX)}$ = (0.9 × FREQ. + 1.1)mA. for all devices except 8XC51RD+; 8XC51RD+ $I_{CC}$ = (0.9 x Freq +2.1) mA
   Idle mode: $I_{CC(MAX)}$ = (0.18 × FREQ. +1.0)mA
6. This value applies to $T_{amb}$ = 0°C to +70°C. For $T_{amb}$ = –40°C to +85°C, $I_{TL}$ = –750µA.
7. Load capacitance for port 0, ALE, and $\overline{PSEN}$ = 100pF, load capacitance for all other outputs = 80pF.
8. Under steady state (non-transient) conditions, $I_{OL}$ must be externally limited as follows:
   Maximum $I_{OL}$ per port pin: 15mA (*NOTE: This is 85°C specification.)
   Maximum $I_{OL}$ per 8-bit port: 26mA
   Maximum total $I_{OL}$ for all outputs: 71mA
   If $I_{OL}$ exceeds the test condition, $V_{OL}$ may exceed the related specification. Pins are not guaranteed to sink current greater than the listed test conditions.
9. ALE is tested to $V_{OH1}$, except when ALE is off then $V_{OH}$ is the voltage specification.
10. Pin capacitance is characterized but not tested. Pin capacitance is less than 25pF. Pin capacitance of ceramic package is less than 15pF (except $\overline{EA}$ is 25pF).

## AC ELECTRICAL CHARACTERISTICS

$T_{amb}$ = 0°C to +70°C or –40°C to +85°C, $V_{CC}$ = +2.7V to +5.5V, $V_{SS}$ = 0V[1, 2, 3]

| SYMBOL | FIGURE | PARAMETER | 16MHz CLOCK | | VARIABLE CLOCK | | UNIT |
|---|---|---|---|---|---|---|---|
| | | | MIN | MAX | MIN | MAX | |
| $1/t_{CLCL}$ | 29 | Oscillator frequency[5] Speed versions : 4; 5;S | | | 3.5 | 16 | MHz |
| $t_{LHLL}$ | 29 | ALE pulse width | 85 | | $2t_{CLCL}$–40 | | ns |
| $t_{AVLL}$ | 29 | Address valid to ALE low | 22 | | $t_{CLCL}$–40 | | ns |
| $t_{LLAX}$ | 29 | Address hold after ALE low | 32 | | $t_{CLCL}$–30 | | ns |
| $t_{LLIV}$ | 29 | ALE low to valid instruction in | | 150 | | $4t_{CLCL}$–100 | ns |
| $t_{LLPL}$ | 29 | ALE low to $\overline{PSEN}$ low | 32 | | $t_{CLCL}$–30 | | ns |
| $t_{PLPH}$ | 29 | $\overline{PSEN}$ pulse width | 142 | | $3t_{CLCL}$–45 | | ns |
| $t_{PLIV}$ | 29 | $\overline{PSEN}$ low to valid instruction in | | 82 | | $3t_{CLCL}$–105 | ns |
| $t_{PXIX}$ | 29 | Input instruction hold after $\overline{PSEN}$ | 0 | | 0 | | ns |
| $t_{PXIZ}$ | 29 | Input instruction float after $\overline{PSEN}$ | | 37 | | $t_{CLCL}$–25 | ns |
| $t_{AVIV}$ [5] | 29 | Address to valid instruction in | | 207 | | $5t_{CLCL}$–105 | ns |
| $t_{PLAZ}$ | 29 | $\overline{PSEN}$ low to address float | | 10 | | 10 | ns |
| **Data Memory** | | | | | | | |
| $t_{RLRH}$ | 30, 31 | $\overline{RD}$ pulse width | 275 | | $6t_{CLCL}$–100 | | ns |
| $t_{WLWH}$ | 30, 31 | $\overline{WR}$ pulse width | 275 | | $6t_{CLCL}$–100 | | ns |
| $t_{RLDV}$ | 30, 31 | $\overline{RD}$ low to valid data in | | 147 | | $5t_{CLCL}$–165 | ns |
| $t_{RHDX}$ | 30, 31 | Data hold after $\overline{RD}$ | 0 | | 0 | | ns |
| $t_{RHDZ}$ | 30, 31 | Data float after $\overline{RD}$ | | 65 | | $2t_{CLCL}$–60 | ns |
| $t_{LLDV}$ | 30, 31 | ALE low to valid data in | | 350 | | $8t_{CLCL}$–150 | ns |
| $t_{AVDV}$ | 30, 31 | Address to valid data in | | 397 | | $9t_{CLCL}$–165 | ns |
| $t_{LLWL}$ | 30, 31 | ALE low to $\overline{RD}$ or $\overline{WR}$ low | 137 | 239 | $3t_{CLCL}$–50 | $3t_{CLCL}$+50 | ns |
| $t_{AVWL}$ | 30, 31 | Address valid to $\overline{WR}$ low or $\overline{RD}$ low | 122 | | $4t_{CLCL}$–130 | | ns |
| $t_{QVWX}$ | 30, 31 | Data valid to $\overline{WR}$ transition | 13 | | $t_{CLCL}$–50 | | ns |
| $t_{WHQX}$ | 30, 31 | Data hold after $\overline{WR}$ | 13 | | $t_{CLCL}$–50 | | ns |
| $t_{QVWH}$ | 31 | Data valid to $\overline{WR}$ high | 287 | | $7t_{CLCL}$–150 | | ns |
| $t_{RLAZ}$ | 30, 31 | $\overline{RD}$ low to address float | | 0 | | 0 | ns |
| $t_{WHLH}$ | 30, 31 | $\overline{RD}$ or $\overline{WR}$ high to ALE high | 23 | 103 | $t_{CLCL}$–40 | $t_{CLCL}$+40 | ns |
| **External Clock** | | | | | | | |
| $t_{CHCX}$ | 33 | High time | 20 | | 20 | $t_{CLCL}$–$t_{CLCX}$ | ns |
| $t_{CLCX}$ | 33 | Low time | 20 | | 20 | $t_{CLCL}$–$t_{CHCX}$ | ns |
| $t_{CLCH}$ | 33 | Rise time | | 20 | | 20 | ns |
| $t_{CHCL}$ | 33 | Fall time | | 20 | | 20 | ns |
| **Shift Register** | | | | | | | |
| $t_{XLXL}$ | 32 | Serial port clock cycle time | 750 | | $12t_{CLCL}$ | | ns |
| $t_{QVXH}$ | 32 | Output data setup to clock rising edge | 492 | | $10t_{CLCL}$–133 | | ns |
| $t_{XHQX}$ | 32 | Output data hold after clock rising edge | 8 | | $2t_{CLCL}$–117 | | ns |
| $t_{XHDX}$ | 32 | Input data hold after clock rising edge | 0 | | 0 | | ns |
| $t_{XHDV}$ | 32 | Clock rising edge to input data valid | | 492 | | $10t_{CLCL}$–133 | ns |

**NOTES:**
1. Parameters are valid over operating temperature range unless otherwise specified.
2. Load capacitance for port 0, ALE, and $\overline{PSEN}$ = 100pF, load capacitance for all other outputs = 80pF.
3. Interfacing the microcontroller to devices with float times up to 45ns is permitted. This limited bus contention will not cause damage to Port 0 drivers.
4. See application note AN457 for external memory interface.
5. Parts are guaranteed to operate down to 0Hz.

## AC ELECTRICAL CHARACTERISTICS

$T_{amb}$ = 0°C to +70°C or –40°C to +85°C, $V_{CC}$ = 5V ±10%, $V_{SS}$ = 0V[1, 2, 3]

| SYMBOL | FIGURE | PARAMETER | VARIABLE CLOCK[4] | | 33MHz CLOCK | | UNIT |
|---|---|---|---|---|---|---|---|
| | | | MIN | MAX | MIN | MAX | |
| $t_{LHLL}$ | 29 | ALE pulse width | $2t_{CLCL}$–40 | | 21 | | ns |
| $t_{AVLL}$ | 29 | Address valid to ALE low | $t_{CLCL}$–25 | | 5 | | ns |
| $t_{LLAX}$ | 29 | Address hold after ALE low | $t_{CLCL}$–25 | | | | ns |
| $t_{LLIV}$ | 29 | ALE low to valid instruction in | | $4t_{CLCL}$–65 | | 55 | ns |
| $t_{LLPL}$ | 29 | ALE low to $\overline{PSEN}$ low | $t_{CLCL}$–25 | | 5 | | ns |
| $t_{PLPH}$ | 29 | $\overline{PSEN}$ pulse width | $3t_{CLCL}$–45 | | 45 | | ns |
| $t_{PLIV}$ | 29 | $\overline{PSEN}$ low to valid instruction in | | $3t_{CLCL}$–60 | | 30 | ns |
| $t_{PXIX}$ | 29 | Input instruction hold after $\overline{PSEN}$ | 0 | | 0 | | ns |
| $t_{PXIZ}$ | 29 | Input instruction float after $\overline{PSEN}$ | | $t_{CLCL}$–25 | | 5 | ns |
| $t_{AVIV}$ | 29 | Address to valid instruction in | | $5t_{CLCL}$–80 | | 70 | ns |
| $t_{PLAZ}$ | 29 | $\overline{PSEN}$ low to address float | | 10 | | 10 | ns |
| **Data Memory** | | | | | | | |
| $t_{RLRH}$ | 30, 31 | $\overline{RD}$ pulse width | $6t_{CLCL}$–100 | | 82 | | ns |
| $t_{WLWH}$ | 30, 31 | $\overline{WR}$ pulse width | $6t_{CLCL}$–100 | | 82 | | ns |
| $t_{RLDV}$ | 30, 31 | $\overline{RD}$ low to valid data in | | $5t_{CLCL}$–90 | | 60 | ns |
| $t_{RHDX}$ | 30, 31 | Data hold after $\overline{RD}$ | 0 | | 0 | | ns |
| $t_{RHDZ}$ | 30, 31 | Data float after $\overline{RD}$ | | $2t_{CLCL}$–28 | | 32 | ns |
| $t_{LLDV}$ | 30, 31 | ALE low to valid data in | | $8t_{CLCL}$–150 | | 90 | ns |
| $t_{AVDV}$ | 30, 31 | Address to valid data in | | $9t_{CLCL}$–165 | | 105 | ns |
| $t_{LLWL}$ | 30, 31 | ALE low to $\overline{RD}$ or $\overline{WR}$ low | $3t_{CLCL}$–50 | $3t_{CLCL}$+50 | 40 | 140 | ns |
| $t_{AVWL}$ | 30, 31 | Address valid to $\overline{WR}$ low or $\overline{RD}$ low | $4t_{CLCL}$–75 | | 45 | | ns |
| $t_{QVWX}$ | 30, 31 | Data valid to $\overline{WR}$ transition | $t_{CLCL}$–30 | | 0 | | ns |
| $t_{WHQX}$ | 30, 31 | Data hold after $\overline{WR}$ | $t_{CLCL}$–25 | | 5 | | ns |
| $t_{QVWH}$ | 31 | Data valid to $\overline{WR}$ high | $7t_{CLCL}$–130 | | 80 | | ns |
| $t_{RLAZ}$ | 30, 31 | $\overline{RD}$ low to address float | | 0 | | 0 | ns |
| $t_{WHLH}$ | 30, 31 | $\overline{RD}$ or $\overline{WR}$ high to ALE high | $t_{CLCL}$–25 | $t_{CLCL}$+25 | 5 | 55 | ns |
| **External Clock** | | | | | | | |
| $t_{CHCX}$ | 33 | High time | $0.38t_{CLCL}$ | $t_{CLCL}$–$t_{CLCX}$ | | | ns |
| $t_{CLCX}$ | 33 | Low time | $0.38t_{CLCL}$ | $t_{CLCL}$–$t_{CHCX}$ | | | ns |
| $t_{CLCH}$ | 33 | Rise time | | 5 | | | ns |
| $t_{CHCL}$ | 33 | Fall time | | 5 | | | ns |
| **Shift Register** | | | | | | | |
| $t_{XLXL}$ | 32 | Serial port clock cycle time | $12t_{CLCL}$ | | 360 | | ns |
| $t_{QVXH}$ | 32 | Output data setup to clock rising edge | $10t_{CLCL}$–133 | | 167 | | ns |
| $t_{XHQX}$ | 32 | Output data hold after clock rising edge | $2t_{CLCL}$–80 | | | | ns |
| $t_{XHDX}$ | 32 | Input data hold after clock rising edge | 0 | | 0 | | ns |
| $t_{XHDV}$ | 32 | Clock rising edge to input data valid | | $10t_{CLCL}$–133 | | 167 | ns |

**NOTES:**
1. Parameters are valid over operating temperature range unless otherwise specified.
2. Load capacitance for port 0, ALE, and $\overline{PSEN}$ = 100pF, load capacitance for all other outputs = 80pF.
3. Interfacing the microcontroller to devices with float times up to 45ns is permitted. This limited bus contention will not cause damage to Port 0 drivers.
4. For frequencies equal or less than 16MHz, see 16MHz “AC Electrical Characteristics”, page 38.
5. Parts are guaranteed to operate down to 0Hz.

## EXPLANATION OF THE AC SYMBOLS

Each timing symbol has five characters. The first character is always 't' (= time). The other characters, depending on their positions, indicate the name of a signal or the logical status of that signal. The designations are:

A – Address
C – Clock
D – Input data
H – Logic level high
I – Instruction (program memory contents)
L – Logic level low, or ALE
P – $\overline{PSEN}$
Q – Output data
R – $\overline{RD}$ signal
t – Time
V – Valid
W – $\overline{WR}$ signal
X – No longer a valid logic level
Z – Float

**Examples:** $t_{AVLL}$ = Time for address valid to ALE low.
$t_{LLPL}$ =Time for ALE low to $\overline{PSEN}$ low.

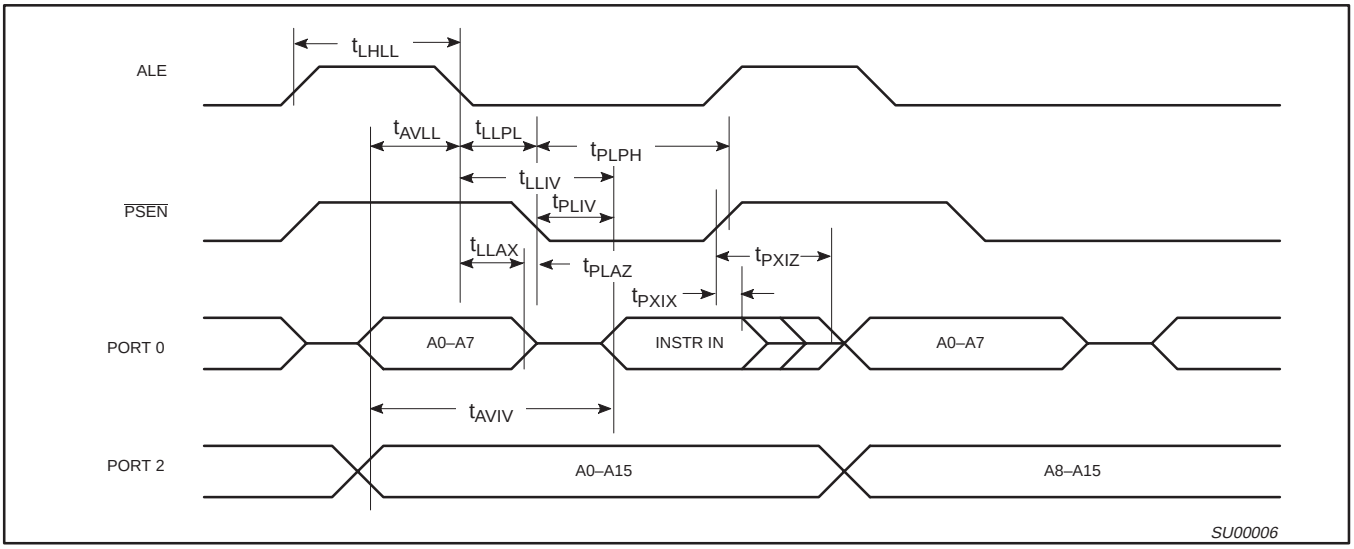


**Figure 29. External Program Memory Read Cycle**

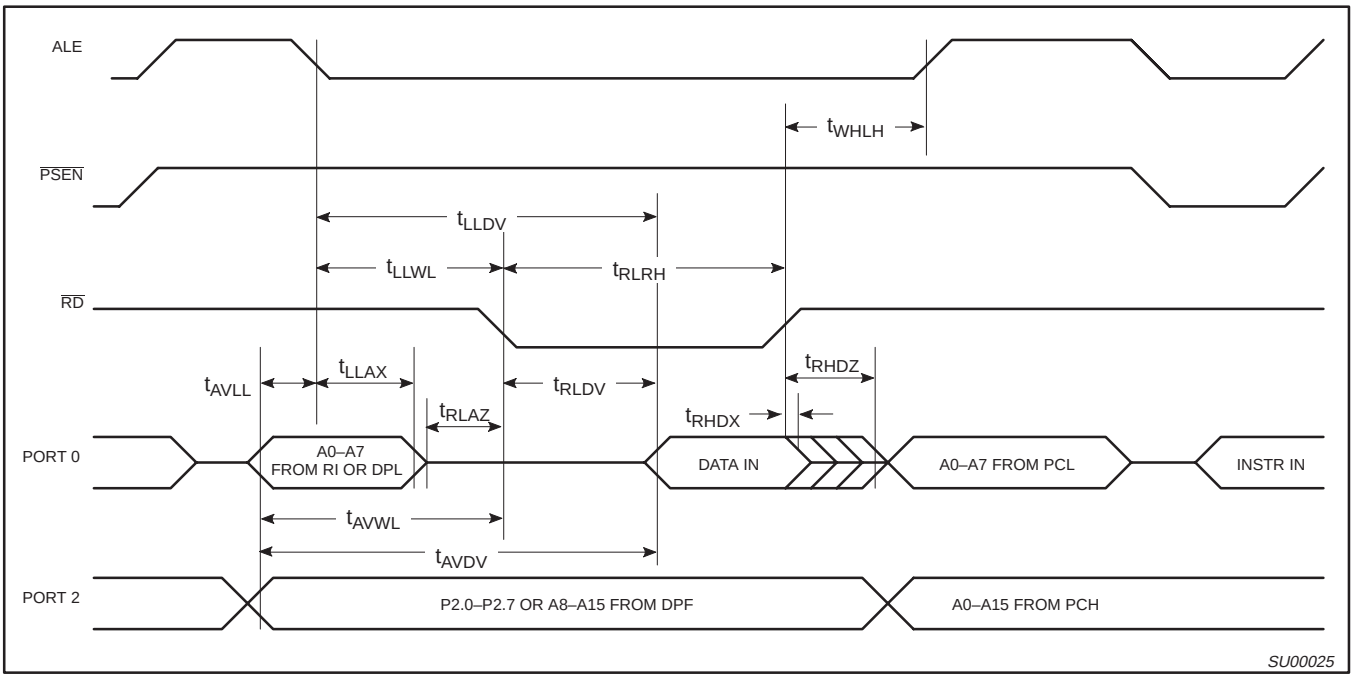


**Figure 30. External Data Memory Read Cycle**

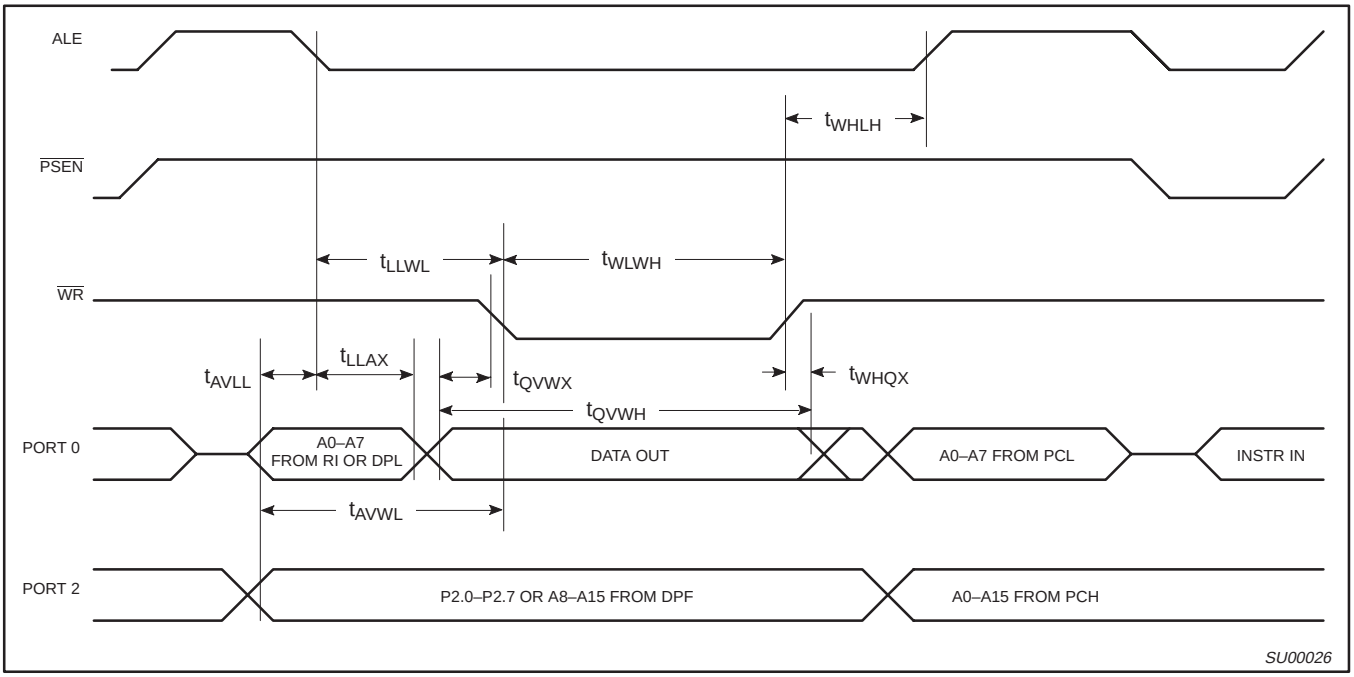


**Figure 31. External Data Memory Write Cycle**

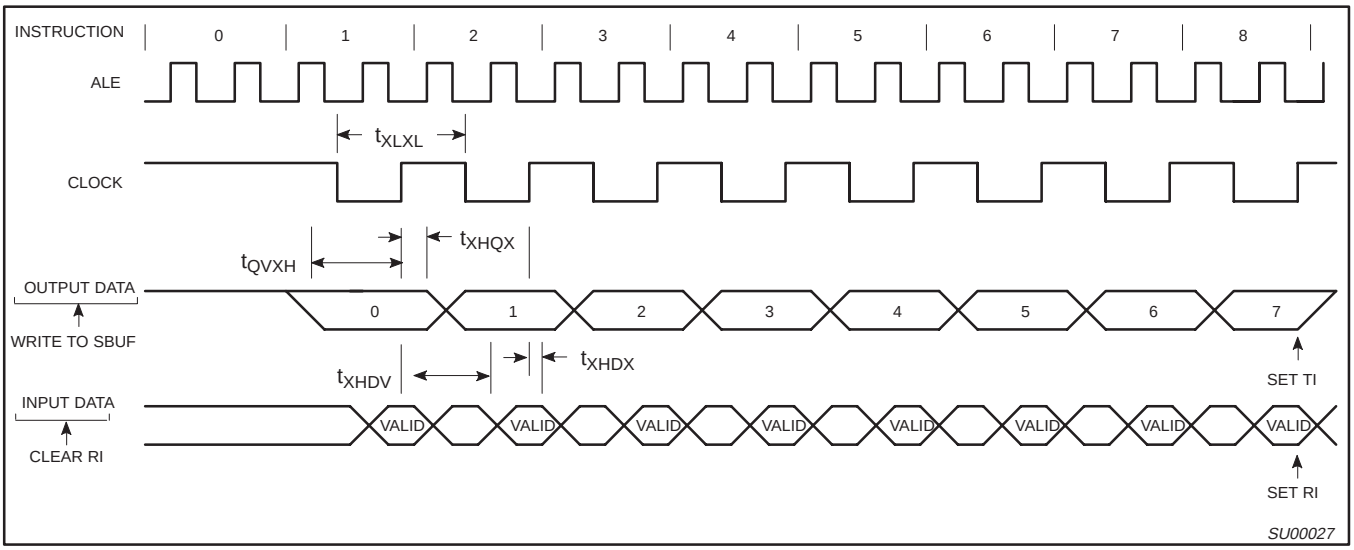


**Figure 32. Shift Register Mode Timing**

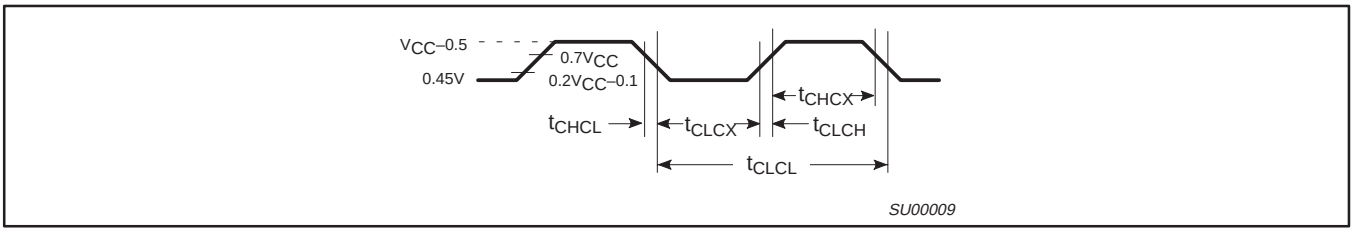


**Figure 33. External Clock Drive**

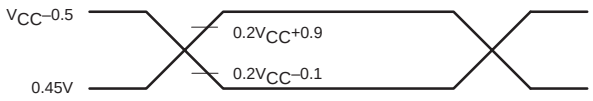


NOTE:
AC inputs during testing are driven at $V_{CC}$ –0.5 for a logic '1' and 0.45V for a logic '0'. Timing measurements are made at $V_{IH}$ min for a logic '1' and $V_{IL}$ max for a logic '0'.

SU00717

**Figure 34. AC Testing Input/Output**

NOTE:
For timing purposes, a port is no longer floating when a 100mV change from load voltage occurs, and begins to float when a 100mV change from the loaded $V_{OH}/V_{OL}$ level occurs. $I_{OH}/I_{OL} \geq \pm 20$mA.

SU00718

**Figure 35. Float Waveform**

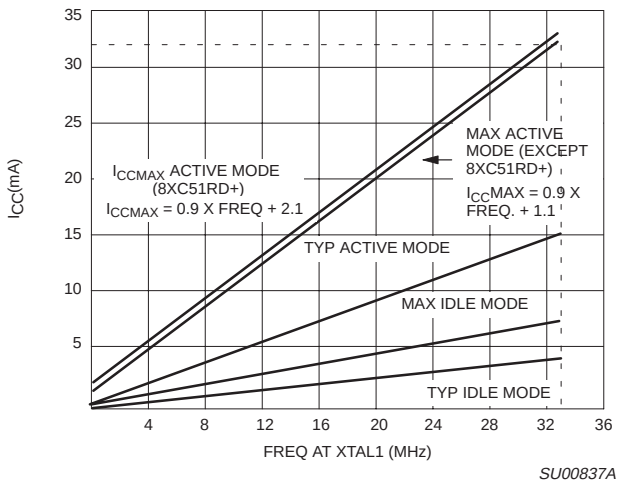


SU00837A

**Figure 36. $I_{CC}$ vs. FREQ**
**Valid only within frequency specifications of the device under test**

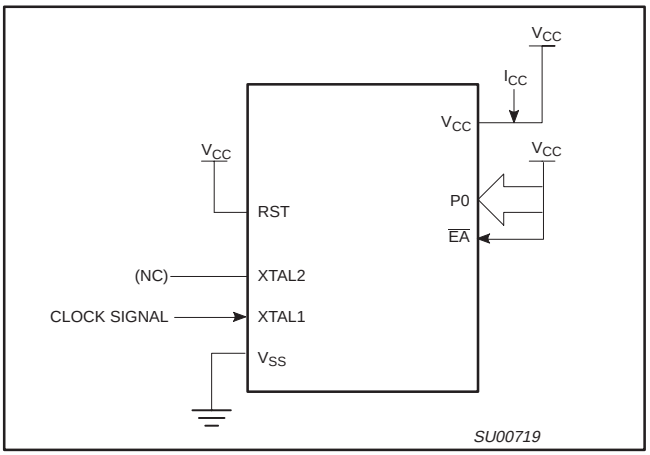


**Figure 37. $I_{CC}$ Test Condition, Active Mode**
**All other pins are disconnected**

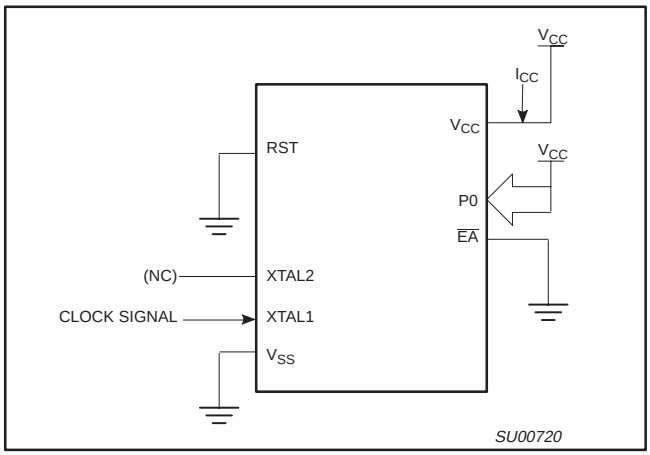


**Figure 38. $I_{CC}$ Test Condition, Idle Mode**
**All other pins are disconnected**

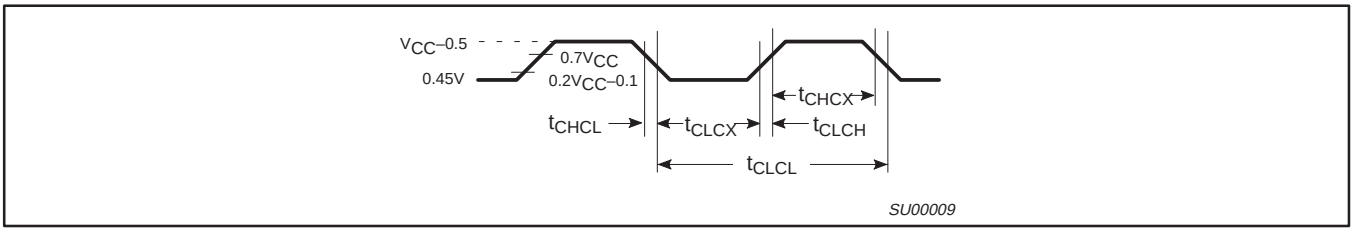


**Figure 39. Clock Signal Waveform for $I_{CC}$ Tests in Active and Idle Modes**
**$t_{CLCH} = t_{CHCL} = 5ns$**

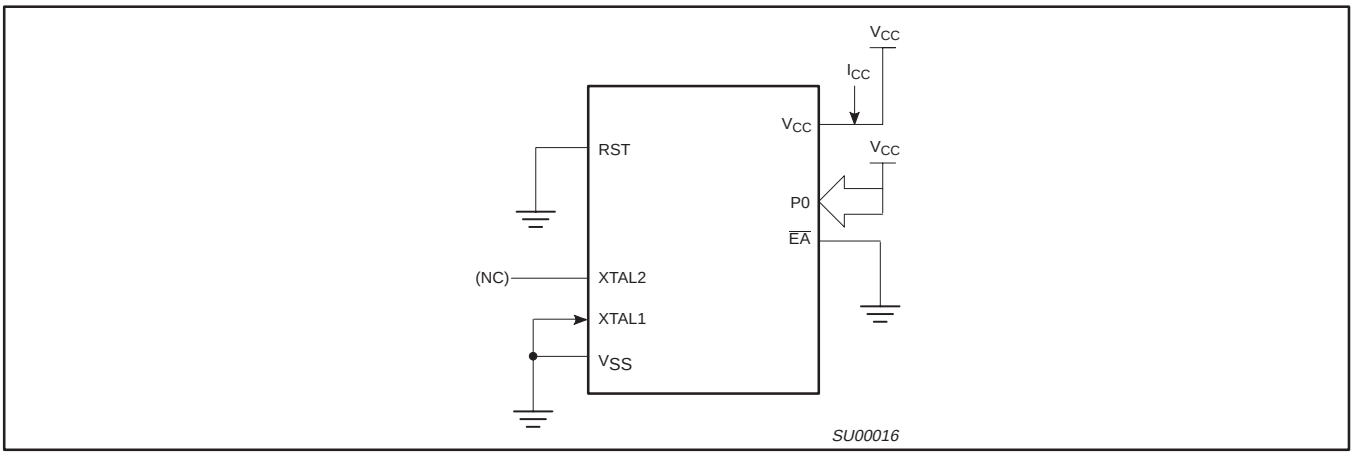


**Figure 40. $I_{CC}$ Test Condition, Power Down Mode**
**All other pins are disconnected. $V_{CC}$ = 2V to 5.5V**

## EPROM CHARACTERISTICS

All these devices can be programmed by using a modified Improved Quick-Pulse Programming™ algorithm. It differs from older methods in the value used for $V_{PP}$ (programming supply voltage) and in the width and number of the ALE/$\overline{PROG}$ pulses.

The family contains two signature bytes that can be read and used by an EPROM programming system to identify the device. The signature bytes identify the device as being manufactured by Philips.

Table 9 shows the logic levels for reading the signature byte, and for programming the program memory, the encryption table, and the security bits. The circuit configuration and waveforms for quick-pulse programming are shown in Figures 41 and 42. Figure 43 shows the circuit configuration for normal program memory verification.

### Quick-Pulse Programming

The setup for microcontroller quick-pulse programming is shown in Figure 41. Note that the device is running with a 4 to 6MHz oscillator. The reason the oscillator needs to be running is that the device is executing internal address and program data transfers.

The address of the EPROM location to be programmed is applied to ports 1 and 2, as shown in Figure 41. The code byte to be programmed into that location is applied to port 0. RST, $\overline{PSEN}$ and pins of ports 2 and 3 specified in Table 9 are held at the 'Program Code Data' levels indicated in Table 9. The ALE/$\overline{PROG}$ is pulsed low 5 times as shown in Figure 42.

To program the encryption table, repeat the 5 pulse programming sequence for addresses 0 through 1FH, using the 'Pgm Encryption Table' levels. Do not forget that after the encryption table is programmed, verification cycles will produce only encrypted data.

To program the security bits, repeat the 5 pulse programming sequence using the 'Pgm Security Bit' levels. After one security bit is programmed, further programming of the code memory and encryption table is disabled. However, the other security bits can still be programmed.

Note that the $\overline{EA}$/$V_{PP}$ pin must not be allowed to go above the maximum specified $V_{PP}$ level for any amount of time. Even a narrow glitch above that voltage can cause permanent damage to the device. The $V_{PP}$ source should be well regulated and free of glitches and overshoot.

#### Program Verification

If security bits 2 and 3 have not been programmed, the on-chip program memory can be read out for program verification. The address of the program memory locations to be read is applied to ports 1 and 2 as shown in Figure 43. The other pins are held at the 'Verify Code Data' levels indicated in Table 9. The contents of the address location will be emitted on port 0. External pull-ups are required on port 0 for this operation.

If the 64 byte encryption table has been programmed, the data presented at port 0 will be the exclusive NOR of the program byte with one of the encryption bytes. The user will have to know the encryption table contents in order to correctly decode the verification data. The encryption table itself cannot be read out.

#### Reading the Signature Bytes

The signature bytes are read by the same procedure as a normal verification of locations 030H and 031H, except that P3.6 and P3.7 need to be pulled to a logic low. The values are:

(030H) = 15H indicates manufactured by Philips
(031H) = 97H indicates 87C52
BBH indicates 87C54
BDH indicates 87C58
B1H indicates 87C51FA
B2H indicates 87C51FB
B3H indicates 87C51FC
CAH indicates 87C51RA+
CBH indicates 87C51RB+
CCH indicates 87C51RC+
CDH indicates 87C51RD+
(060H) = NA

### Program/Verify Algorithms

Any algorithm in agreement with the conditions listed in Table 9, and which satisfies the timing specifications, is suitable.

### Security Bits

With none of the security bits programmed the code in the program memory can be verified. If the encryption table is programmed, the code will be encrypted when verified. When only security bit 1 (see Table 10) is programmed, MOVC instructions executed from external program memory are disabled from fetching code bytes from the internal memory, EA is latched on Reset and all further programming of the EPROM is disabled. When security bits 1 and 2 are programmed, in addition to the above, verify mode is disabled. When all three security bits are programmed, all of the conditions above apply and all external program memory execution is disabled.

### Encryption Array

64 bytes of encryption array are initially unprogrammed (all 1s).

™Trademark phrase of Intel Corporation.

## Table 9. EPROM Programming Modes

| MODE | RST | $\overline{PSEN}$ | ALE/$\overline{PROG}$ | $\overline{EA}$/$V_{PP}$ | P2.7 | P2.6 | P3.7 | P3.6 |
|---|---|---|---|---|---|---|---|---|
| Read signature | 1 | 0 | 1 | 1 | 0 | 0 | 0 | 0 |
| Program code data | 1 | 0 | 0* | $V_{PP}$ | 1 | 0 | 1 | 1 |
| Verify code data | 1 | 0 | 1 | 1 | 0 | 0 | 1 | 1 |
| Pgm encryption table | 1 | 0 | 0* | $V_{PP}$ | 1 | 0 | 1 | 0 |
| Pgm security bit 1 | 1 | 0 | 0* | $V_{PP}$ | 1 | 1 | 1 | 1 |
| Pgm security bit 2 | 1 | 0 | 0* | $V_{PP}$ | 1 | 1 | 0 | 0 |
| Pgm security bit 3 | 1 | 0 | 0* | $V_{PP}$ | 0 | 1 | 0 | 1 |

**NOTES:**
1. ‘0’ = Valid low for that pin, ‘1’ = valid high for that pin.
2. $V_{PP}$ = 12.75V ±0.25V.
3. $V_{CC}$ = 5V±10% during programming and verification.

* ALE/$\overline{PROG}$ receives 5 programming pulses for code data (also for user array; 5 pulses for encryption or security bits) while $V_{PP}$ is held at 12.75V. Each programming pulse is low for 100µs (±10µs) and high for a minimum of 10µs.

## Table 10. Program Security Bits for EPROM Devices

| PROGRAM LOCK BITS[1, 2] | | | | |
|---|---|---|---|---|
| | SB1 | SB2 | SB3 | PROTECTION DESCRIPTION |
| 1 | U | U | U | No Program Security features enabled. (Code verify will still be encrypted by the Encryption Array if programmed.) |
| 2 | P | U | U | MOVC instructions executed from external program memory are disabled from fetching code bytes from internal memory, $\overline{EA}$ is sampled and latched on Reset, and further programming of the EPROM is disabled. |
| 3 | P | P | U | Same as 2, also verify is disabled. |
| 4 | P | P | P | Same as 3, external execution is disabled. |

**NOTES:**
1. P – programmed. U – unprogrammed.
2. Any other combination of the security bits is not defined.

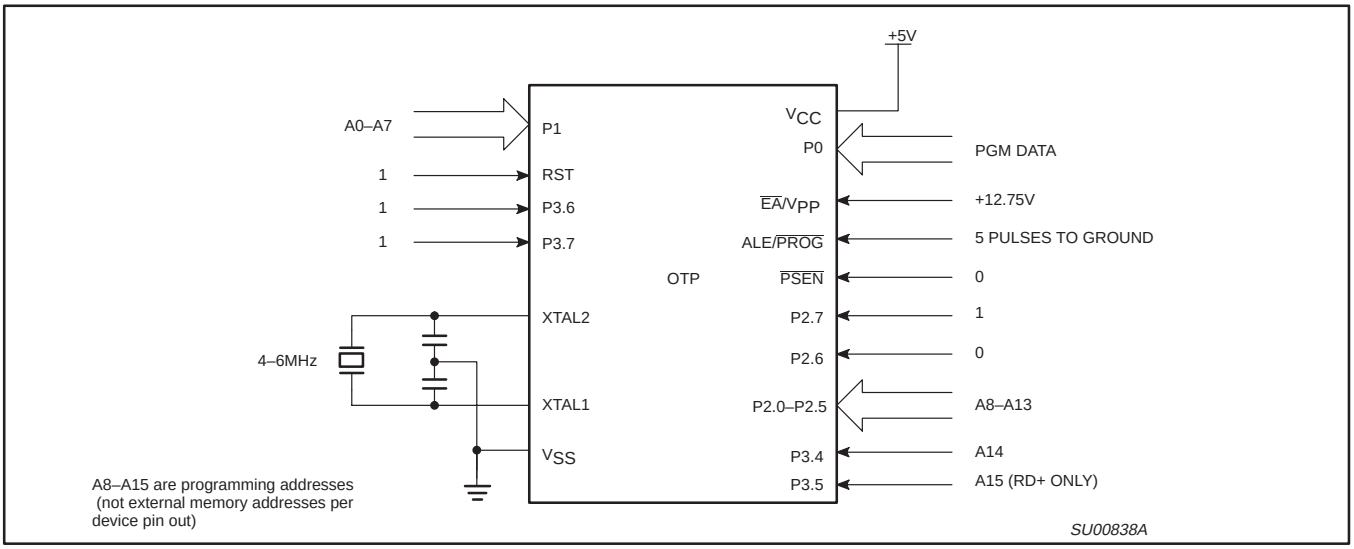


**Figure 41. Programming Configuration**

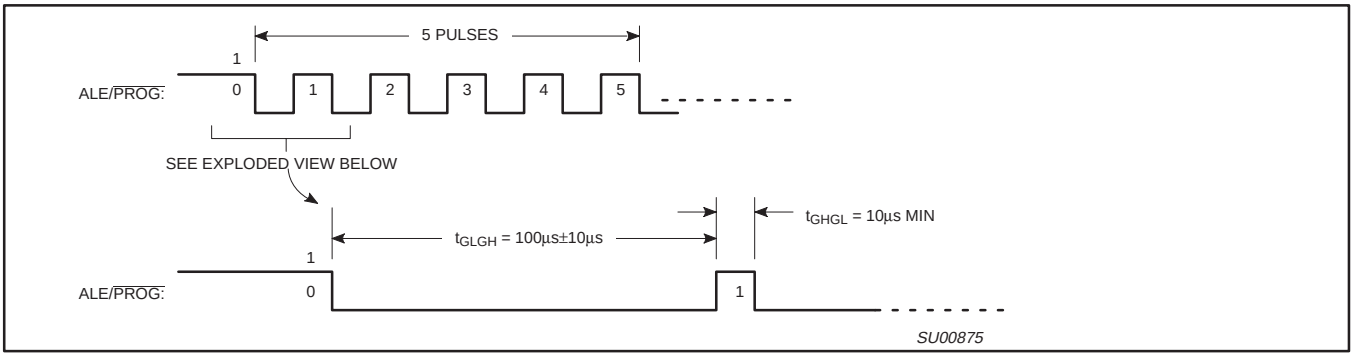


**Figure 42. $\overline{\text{PROG}}$ Waveform**

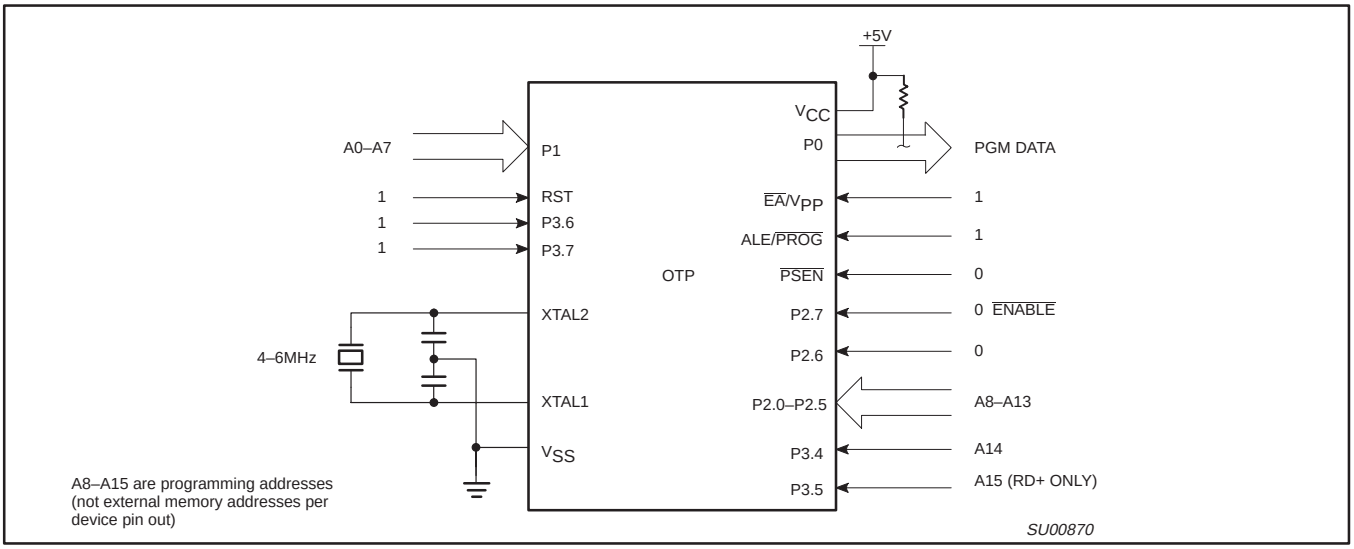


**Figure 43. Program Verification**

## EPROM PROGRAMMING AND VERIFICATION CHARACTERISTICS

$T_{amb}$ = 21°C to +27°C, $V_{CC}$ = 5V±10%, $V_{SS}$ = 0V (See Figure 44)

| SYMBOL | PARAMETER | MIN | MAX | UNIT |
|---|---|---|---|---|
| $V_{PP}$ | Programming supply voltage | 12.5 | 13.0 | V |
| $I_{PP}$ | Programming supply current | | 50 [1] | mA |
| $1/t_{CLCL}$ | Oscillator frequency | 4 | 6 | MHz |
| $t_{AVGL}$ | Address setup to $\overline{PROG}$ low | $48t_{CLCL}$ | | |
| $t_{GHAX}$ | Address hold after $\overline{PROG}$ | $48t_{CLCL}$ | | |
| $t_{DVGL}$ | Data setup to $\overline{PROG}$ low | $48t_{CLCL}$ | | |
| $t_{GHDX}$ | Data hold after $\overline{PROG}$ | $48t_{CLCL}$ | | |
| $t_{EHSH}$ | P2.7 ($\overline{ENABLE}$) high to $V_{PP}$ | $48t_{CLCL}$ | | |
| $t_{SHGL}$ | $V_{PP}$ setup to $\overline{PROG}$ low | 10 | | µs |
| $t_{GHSL}$ | $V_{PP}$ hold after $\overline{PROG}$ | 10 | | µs |
| $t_{GLGH}$ | $\overline{PROG}$ width | 90 | 110 | µs |
| $t_{AVQV}$ | Address to data valid | | $48t_{CLCL}$ | |
| $t_{ELQZ}$ | $\overline{ENABLE}$ low to data valid | | $48t_{CLCL}$ | |
| $t_{EHQZ}$ | Data float after $\overline{ENABLE}$ | 0 | $48t_{CLCL}$ | |
| $t_{GHGL}$ | $\overline{PROG}$ high to $\overline{PROG}$ low | 10 | | µs |

**NOTE:**
1. Not tested.

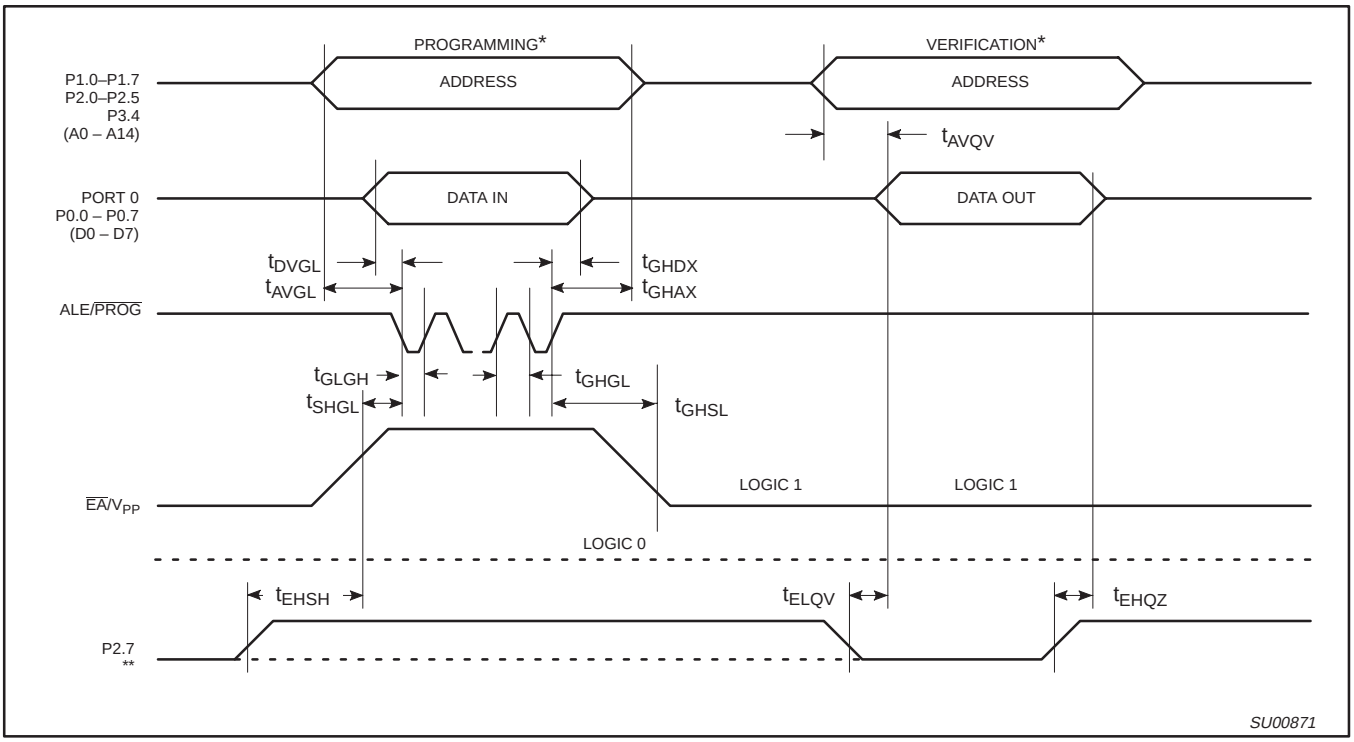


**NOTES:**
* FOR PROGRAMMING CONFIGURATION SEE FIGURE 41.
FOR VERIFICATION CONDITIONS SEE FIGURE 43.
** SEE TABLE 9.

**Figure 44. EPROM Programming and Verification**

## MASK ROM DEVICES

### Security Bits

With none of the security bits programmed the code in the program memory can be verified. If the encryption table is programmed, the code will be encrypted when verified. When only security bit 1 (see Table 11) is programmed, MOVC instructions executed from external program memory are disabled from fetching code bytes from the internal memory, $\overline{EA}$ is latched on Reset and all further programming of the EPROM is disabled. When security bits 1 and 2 are programmed, in addition to the above, verify mode is disabled.

### Encryption Array

64 bytes of encryption array are initially unprogrammed (all 1s).

### Table 11. Program Security Bits

| PROGRAM LOCK BITS[1, 2] | | | |
|---|---|---|---|
| | SB1 | SB2 | PROTECTION DESCRIPTION |
| 1 | U | U | No Program Security features enabled.<br>(Code verify will still be encrypted by the Encryption Array if programmed.) |
| 2 | P | U | MOVC instructions executed from external program memory are disabled from fetching code bytes from internal memory, $\overline{EA}$ is sampled and latched on Reset, and further programming of the EPROM is disabled. |

**NOTES:**
1. P – programmed. U – unprogrammed.
2. Any other combination of the security bits is not defined.

## ROM CODE SUBMISSION FOR 8K ROM DEVICES (80C52, 83C51FA, AND 83C51RA+)

When submitting ROM code for the 8k ROM devices, the following must be specified:
1. 8k byte user ROM data
2. 64 byte ROM encryption key
3. ROM security bits.

| ADDRESS | CONTENT | BIT(S) | COMMENT |
|---|---|---|---|
| 0000H to 1FFFH | DATA | 7:0 | User ROM Data |
| 2000H to 203FH | KEY | 7:0 | ROM Encryption Key<br>FFH = no encryption |
| 2040H | SEC | 0 | ROM Security Bit 1<br>0 = enable security<br>1 = disable security |
| 2040H | SEC | 1 | ROM Security Bit 2<br>0 = enable security<br>1 = disable security |

**Security Bit 1:** When programmed, this bit has two effects on masked ROM parts:
1. External MOVC is disabled, and
2. $\overline{EA}$ is latched on Reset.

**Security Bit 2:** When programmed, this bit inhibits Verify User ROM.

**NOTE:** Security Bit 2 cannot be enabled unless Security Bit 1 is enabled.

If the ROM Code file does not include the options, the following information must be included with the ROM code.

For each of the following, check the appropriate box, and send to Philips along with the code:

Security Bit #1: ☐ Enabled ☐ Disabled

Security Bit #2: ☐ Enabled ☐ Disabled

Encryption: ☐ No ☐ Yes If Yes, must send key file.

## ROM CODE SUBMISSION FOR 16K ROM DEVICES (80C54, 83C51FB AND 83C51RB+)

When submitting ROM code for the 16K ROM devices, the following must be specified:

1. 16k byte user ROM data
2. 64 byte ROM encryption key
3. ROM security bits.

| ADDRESS | CONTENT | BIT(S) | COMMENT |
|---|---|---|---|
| 0000H to 3FFFH | DATA | 7:0 | User ROM Data |
| 4000H to 403FH | KEY | 7:0 | ROM Encryption Key<br>FFH = no encryption |
| 4040H | SEC | 0 | ROM Security Bit 1<br>0 = enable security<br>1 = disable security |
| 4040H | SEC | 1 | ROM Security Bit 2<br>0 = enable security<br>1 = disable security |

**Security Bit 1:** When programmed, this bit has two effects on masked ROM parts:

1. External MOVC is disabled, and
2. $\overline{EA}$ is latched on Reset.

**Security Bit 2:** When programmed, this bit inhibits Verify User ROM.

**NOTE:** Security Bit 2 cannot be enabled unless Security Bit 1 is enabled.

If the ROM Code file does not include the options, the following information must be included with the ROM code.

For each of the following, check the appropriate box, and send to Philips along with the code:

Security Bit #1: ☐ Enabled ☐ Disabled

Security Bit #2: ☐ Enabled ☐ Disabled

Encryption: ☐ No ☐ Yes If Yes, must send key file.

## ROM CODE SUBMISSION FOR 32K ROM DEVICES (80C58, 83C51FC, AND 83C51RC+)

When submitting ROM code for the 32K ROM devices, the following must be specified:

1. 32k byte user ROM data
2. 64 byte ROM encryption key
3. ROM security bits.

| ADDRESS | CONTENT | BIT(S) | COMMENT |
|---|---|---|---|
| 0000H to 7FFFH | DATA | 7:0 | User ROM Data |
| 8000H to 803FH | KEY | 7:0 | ROM Encryption Key<br>FFH = no encryption |
| 8040H | SEC | 0 | ROM Security Bit 1<br>0 = enable security<br>1 = disable security |
| 8040H | SEC | 1 | ROM Security Bit 2<br>0 = enable security<br>1 = disable security |

**Security Bit 1:** When programmed, this bit has two effects on masked ROM parts:

1. External MOVC is disabled, and
2. $\overline{EA}$ is latched on Reset.

**Security Bit 2:** When programmed, this bit inhibits Verify User ROM.

**NOTE:** Security Bit 2 cannot be enabled unless Security Bit 1 is enabled.

If the ROM Code file does not include the options, the following information must be included with the ROM code.

For each of the following, check the appropriate box, and send to Philips along with the code:

Security Bit #1: ☐ Enabled ☐ Disabled

Security Bit #2: ☐ Enabled ☐ Disabled

Encryption: ☐ No ☐ Yes If Yes, must send key file.

## ROM CODE SUBMISSION FOR 64K ROM DEVICE (83C51RD+)

When submitting ROM code for the 64K ROM devices, the following must be specified:

1. 64k byte user ROM data
2. 64 byte ROM encryption key
3. ROM security bits.

| ADDRESS | CONTENT | BIT(S) | COMMENT |
|---|---|---|---|
| 0000H to FFFFH | DATA | 7:0 | User ROM Data |
| 10000H to 1003FH | KEY | 7:0 | ROM Encryption Key<br>FFH = no encryption |
| 10040H | SEC | 0 | ROM Security Bit 1<br>0 = enable security<br>1 = disable security |
| 10040H | SEC | 1 | ROM Security Bit 2<br>0 = enable security<br>1 = disable security |

**Security Bit 1:** When programmed, this bit has two effects on masked ROM parts:

1. External MOVC is disabled, and
2. $\overline{EA}$ is latched on Reset.

**Security Bit 2:** When programmed, this bit inhibits Verify User ROM.

**NOTE:** Security Bit 2 cannot be enabled unless Security Bit 1 is enabled.

If the ROM Code file does not include the options, the following information must be included with the ROM code.

For each of the following, check the appropriate box, and send to Philips along with the code:

Security Bit #1: ☐ Enabled ☐ Disabled

Security Bit #2: ☐ Enabled ☐ Disabled

Encryption: ☐ No ☐ Yes If Yes, must send key file.

## QFP44: plastic quad flat package; 44 leads (lead length 1.3 mm); body 10 x 10 x 1.75 mm SOT307-2

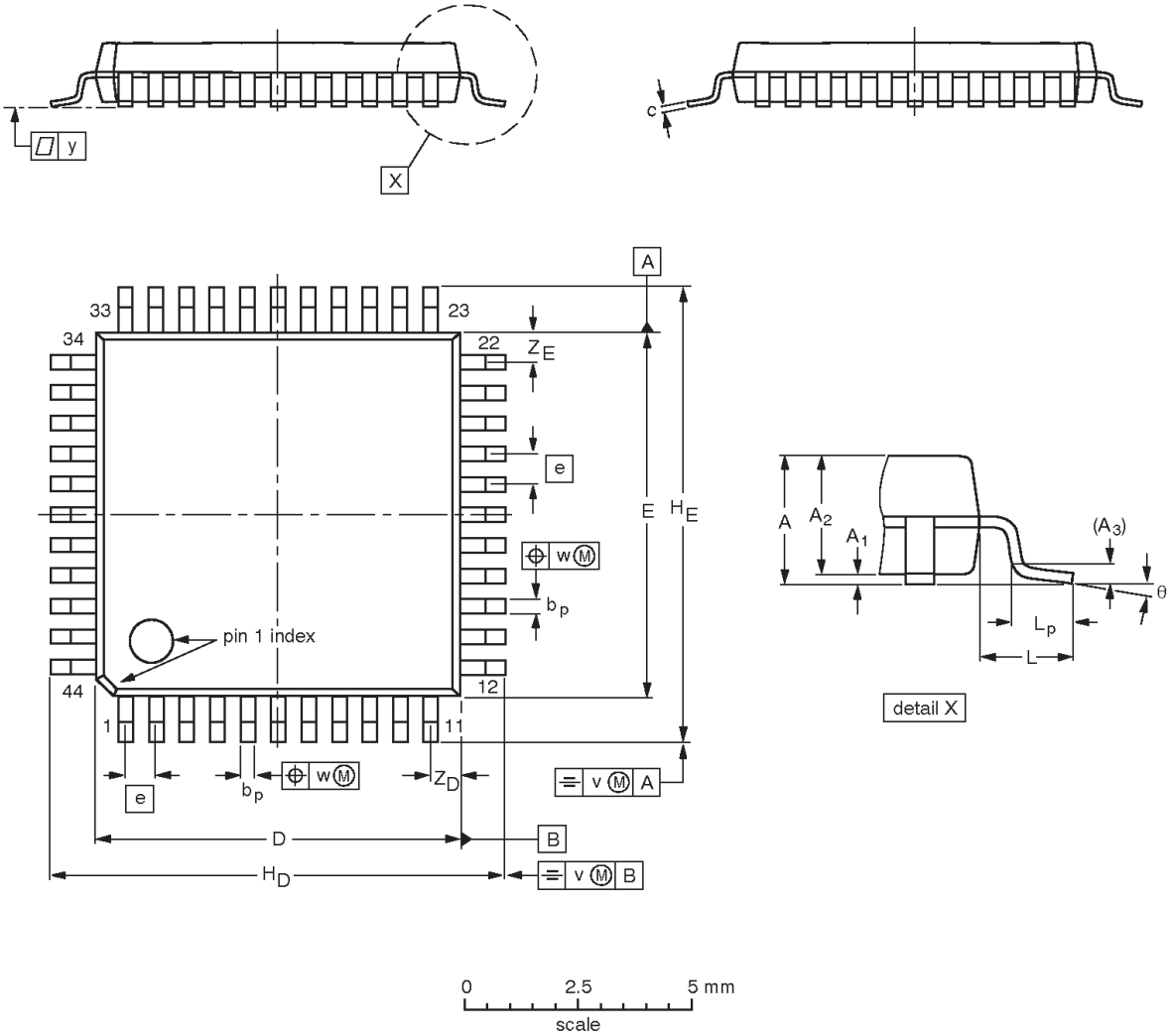


**DIMENSIONS (mm are the original dimensions)**

| UNIT | A max. | $A_1$ | $A_2$ | $A_3$ | $b_p$ | c | D(1) | E(1) | e | $H_D$ | $H_E$ | L | $L_p$ | v | w | y | $Z_D$(1) | $Z_E$(1) | θ |
|---|---|---|---|---|---|---|---|---|---|---|---|---|---|---|---|---|---|---|---|
| mm | 2.10 | 0.25<br>0.05 | 1.85<br>1.65 | 0.25 | 0.40<br>0.20 | 0.25<br>0.14 | 10.1<br>9.9 | 10.1<br>9.9 | 0.8 | 12.9<br>12.3 | 12.9<br>12.3 | 1.3 | 0.95<br>0.55 | 0.15 | 0.15 | 0.1 | 1.2<br>0.8 | 1.2<br>0.8 | 10°<br>0° |

**Note**

1. Plastic or metal protrusions of 0.25 mm maximum per side are not included.

| OUTLINE VERSION | REFERENCES | | | | EUROPEAN PROJECTION | ISSUE DATE |
|---|---|---|---|---|---|---|
| | IEC | JEDEC | EIAJ | | | |
| SOT307-2 | | | | | | ~~95-02-04~~<br>97-08-01 |

## PLCC44: plastic leaded chip carrier; 44 leads — SOT187-2

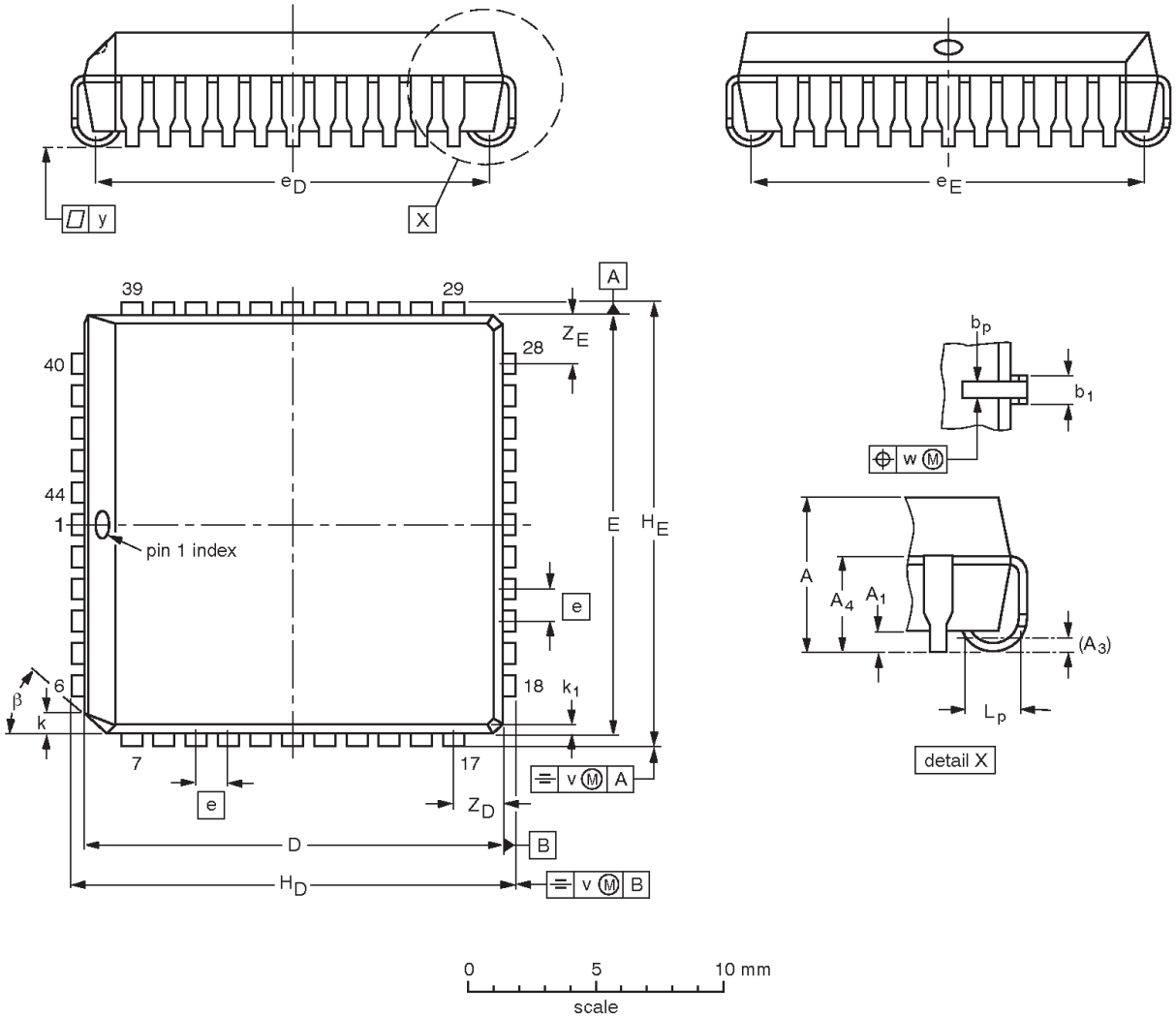


**DIMENSIONS (millimetre dimensions are derived from the original inch dimensions)**

| UNIT | A | $A_1$ min. | $A_3$ | $A_4$ max. | $b_p$ | $b_1$ | D(1) | E(1) | e | $e_D$ | $e_E$ | $H_D$ | $H_E$ | k | $k_1$ max. | $L_p$ | v | w | y | $Z_D$(1) max. | $Z_E$(1) max. | β |
|---|---|---|---|---|---|---|---|---|---|---|---|---|---|---|---|---|---|---|---|---|---|---|
| mm | 4.57<br>4.19 | 0.51 | 0.25 | 3.05 | 0.53<br>0.33 | 0.81<br>0.66 | 16.66<br>16.51 | 16.66<br>16.51 | 1.27 | 16.00<br>14.99 | 16.00<br>14.99 | 17.65<br>17.40 | 17.65<br>17.40 | 1.22<br>1.07 | 0.51 | 1.44<br>1.02 | 0.18 | 0.18 | 0.10 | 2.16 | 2.16 | 45° |
| inches | 0.180<br>0.165 | 0.020 | 0.01 | 0.12 | 0.021<br>0.013 | 0.032<br>0.026 | 0.656<br>0.650 | 0.656<br>0.650 | 0.05 | 0.630<br>0.590 | 0.630<br>0.590 | 0.695<br>0.685 | 0.695<br>0.685 | 0.048<br>0.042 | 0.020 | 0.057<br>0.040 | 0.007 | 0.007 | 0.004 | 0.085 | 0.085 | |

**Note**

1. Plastic or metal protrusions of 0.01 inches maximum per side are not included.

| OUTLINE VERSION | REFERENCES | | | | EUROPEAN PROJECTION | ISSUE DATE |
|---|---|---|---|---|---|---|
| | IEC | JEDEC | EIAJ | | | |
| SOT187-2 | 112E10 | MO-047AC | | | | ~~95-02-25~~<br>97-12-16 |

## DIP40: plastic dual in-line package; 40 leads (600 mil) SOT129-1

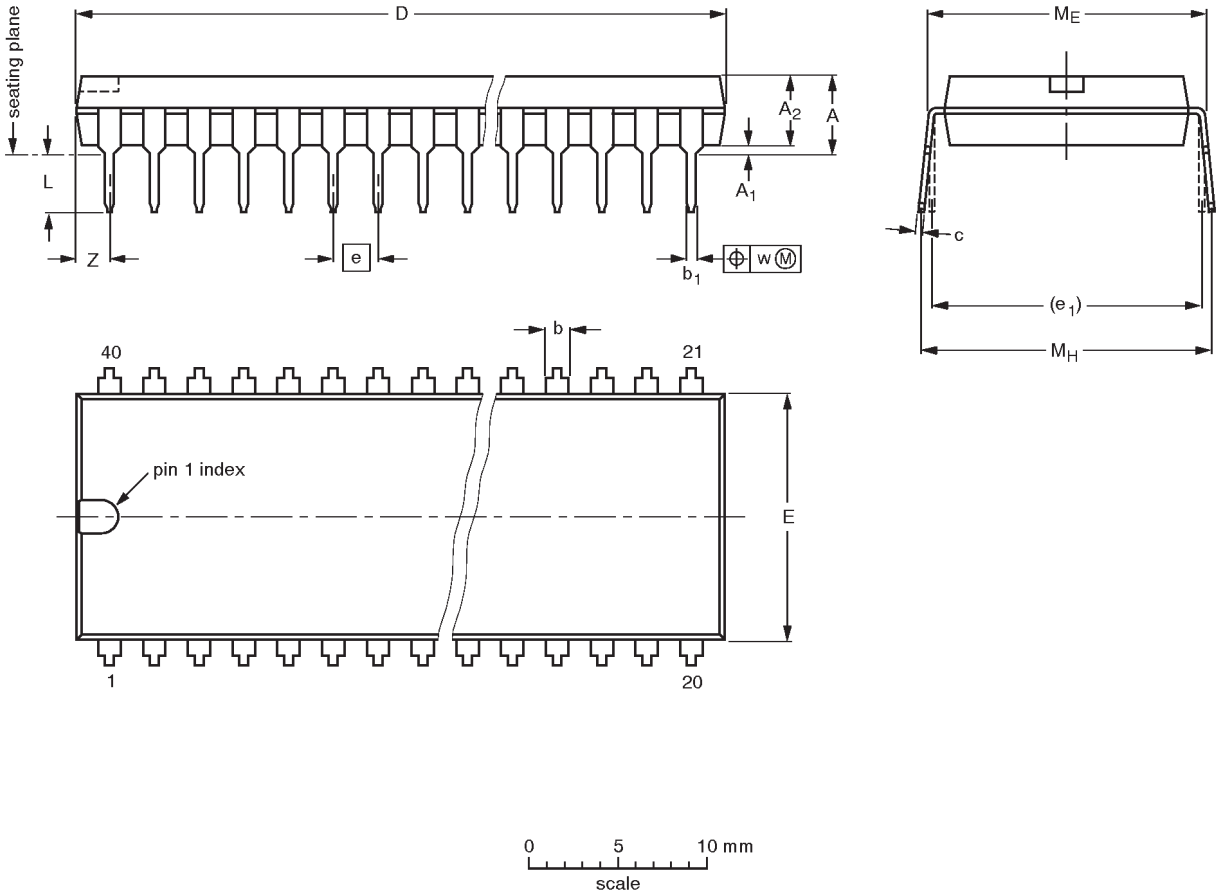


**DIMENSIONS (inch dimensions are derived from the original mm dimensions)**

| UNIT | A max. | $A_1$ min. | $A_2$ max. | b | $b_1$ | c | D (1) | E (1) | e | $e_1$ | L | $M_E$ | $M_H$ | w | Z (1) max. |
|---|---|---|---|---|---|---|---|---|---|---|---|---|---|---|---|
| mm | 4.7 | 0.51 | 4.0 | 1.70<br>1.14 | 0.53<br>0.38 | 0.36<br>0.23 | 52.50<br>51.50 | 14.1<br>13.7 | 2.54 | 15.24 | 3.60<br>3.05 | 15.80<br>15.24 | 17.42<br>15.90 | 0.254 | 2.25 |
| inches | 0.19 | 0.020 | 0.16 | 0.067<br>0.045 | 0.021<br>0.015 | 0.014<br>0.009 | 2.067<br>2.028 | 0.56<br>0.54 | 0.10 | 0.60 | 0.14<br>0.12 | 0.62<br>0.60 | 0.69<br>0.63 | 0.01 | 0.089 |

**Note**

1. Plastic or metal protrusions of 0.25 mm maximum per side are not included.

| OUTLINE VERSION | REFERENCES | | | | EUROPEAN PROJECTION | ISSUE DATE |
|---|---|---|---|---|---|---|
| | IEC | JEDEC | EIAJ | | | |
| SOT129-1 | 051G08 | MO-015AJ | | | | ~~92-11-17~~<br>95-01-14 |

## NOTES

## Data sheet status

| Data sheet status | Product status | Definition [1] |
|---|---|---|
| Objective specification | Development | This data sheet contains the design target or goal specifications for product development. Specification may change in any manner without notice. |
| Preliminary specification | Qualification | This data sheet contains preliminary data, and supplementary data will be published at a later date. Philips Semiconductors reserves the right to make chages at any time without notice in order to improve design and supply the best possible product. |
| Product specification | Production | This data sheet contains final specifications. Philips Semiconductors reserves the right to make changes at any time without notice in order to improve design and supply the best possible product. |

[1] Please consult the most recently issued datasheet before initiating or completing a design.

## Definitions

**Short-form specification —** The data in a short-form specification is extracted from a full data sheet with the same type number and title. For detailed information see the relevant data sheet or data handbook.

**Limiting values definition —** Limiting values given are in accordance with the Absolute Maximum Rating System (IEC 134). Stress above one or more of the limiting values may cause permanent damage to the device. These are stress ratings only and operation of the device at these or at any other conditions above those given in the Characteristics sections of the specification is not implied. Exposure to limiting values for extended periods may affect device reliability.

**Application information —** Applications that are described herein for any of these products are for illustrative purposes only. Philips Semiconductors make no representation or warranty that such applications will be suitable for the specified use without further testing or modification.

## Disclaimers

**Life support —** These products are not designed for use in life support appliances, devices or systems where malfunction of these products can reasonably be expected to result in personal injury. Philips Semiconductors customers using or selling these products for use in such applications do so at their own risk and agree to fully indemnify Philips Semiconductors for any damages resulting from such application.

**Right to make changes —** Philips Semiconductors reserves the right to make changes, without notice, in the products, including circuits, standard cells, and/or software, described or contained herein in order to improve design and/or performance. Philips Semiconductors assumes no responsibility or liability for the use of any of these products, conveys no license or title under any patent, copyright, or mask work right to these products, and makes no representations or warranties that these products are free from patent, copyright, or mask work right infringement, unless otherwise specified.

**Philips Semiconductors**
**811 East Arques Avenue**
**P.O. Box 3409**
**Sunnyvale, California 94088–3409**
**Telephone 800-234-7381**

© Copyright Philips Electronics North America Corporation 1999
All rights reserved. Printed in U.S.A.

Date of release: 04-99

Document order number: 9397 750 05509

Let's make things better.

**Philips Semiconductors**

PHILIPS