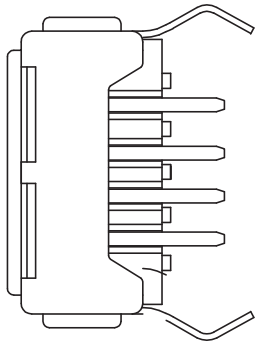

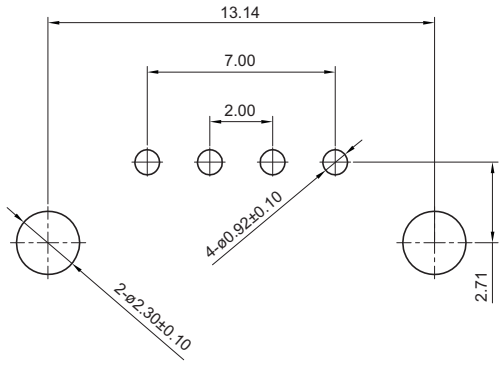

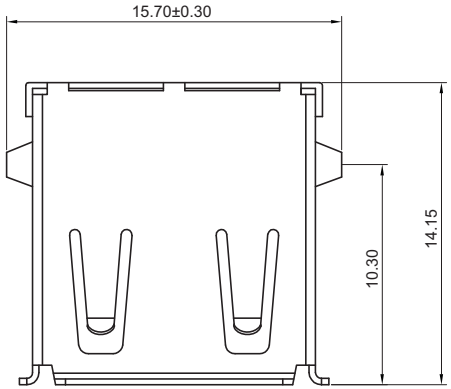

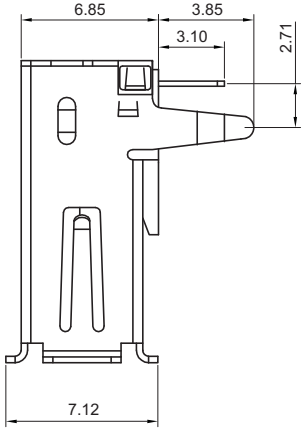

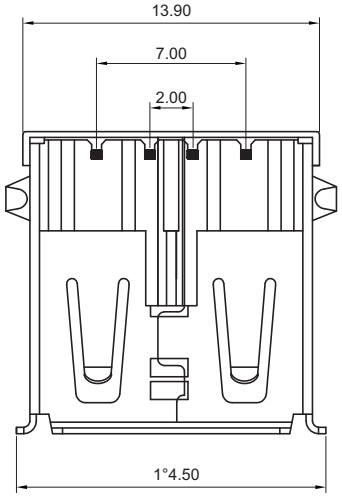

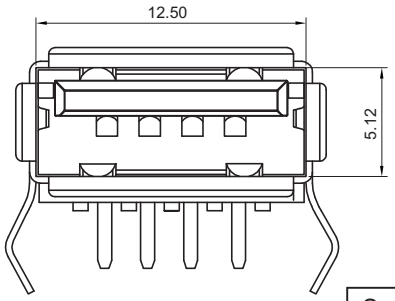

Material:

- Housing: PBT+30% G.F. UL 94V-0
- Contact: Phosphor Bronze
- Shell: Bronze
- Plating Contact: Gold thickness 5μ" and Tin over nickel plated
- Plating Shell: Nickel plated over all
- Housing color: White

Electrical:

- Current-Max: 1.5A
- Voltage-Max: 30V
- Withstanding Voltage: 500V AC
- Contact Resistance: 30mΩ Max.
- Insulation Resistance: 1000MΩ Min.

Environmental

- Temperature range: -55°C~+85°C

Unit: mm

RoHS Compliant

Scale	1:1
TOLERANCE	
X.X	±0.38
X.XX	±0.25
X.XXX	±0.13
X.X°	±3.0°
X.XX°	±1.0°
X.XXX°	±0.5°

Id.	Modification	Date	Name
0			

	Date	Name
Drawn	30.11.12	Wilson
Approved	30.11.12	Groll

ASSMANN WSW components
1840 W. Drake Drive, Suite 101 • Tempe, AZ 85283
Toll Free: 1-877-277-6266 • Email: info@assmann.us

Title
USB 1.1 A/F DIP 90° Connector for PCB Mount, 5μ" Gold, White

ASSMANN WSW-No.
AU-Y1005-R

Drawing-No.

rev00

Replace

Sheet 1/1

Find price and stock options from leading distributors for AU-Y1005-R on Findchips.com:

https://findchips.com/search/AU-Y1005-R

Find CAD models and details for this part:

https://findchips.com/detail/au-y1005-r/ASSMANN-WSW-components-GmbH