EMI Filtered Connectors

from performance to board space, to cost, we offer many reasons and options for managing EMI @ the signal & power I/O

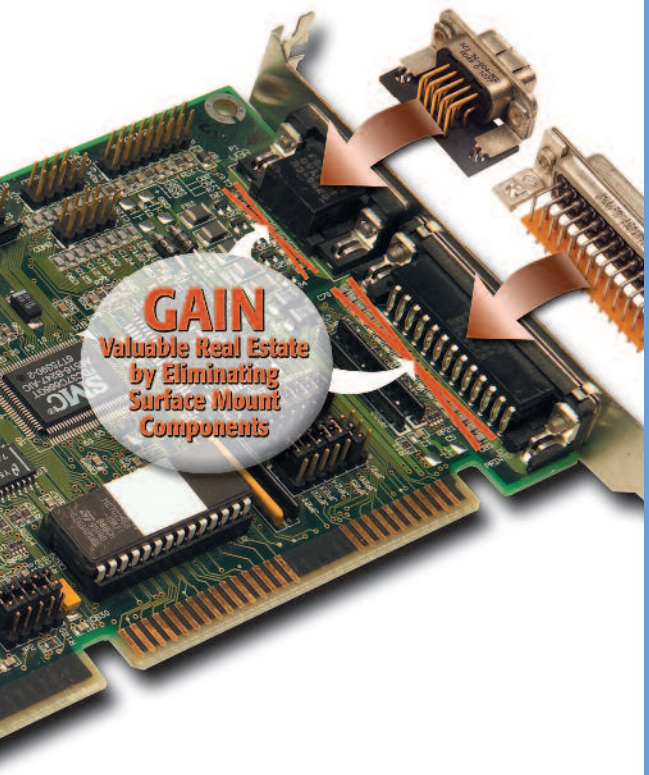

Series F Ferrite Filtered Connectors offer a low cost, space saving solution for high frequency interference… **FC3-FC7**

Series 500 Low-Profile Feed-Through Connectors deliver reliable EMI filtering in 90° PCB and straight PCB connectors… **FC8-FC11**

Series 600 Hi-Density Filtered Connectors meet the growing need for increased circuit densities in smaller packages… **FC12-FC13**

Series 700 High Performance Connectors feature feed-through capacitive and Pi filters for the most effective filtering… **FC16-FC37**

Filtered Combo D-Sub Connectors use tubular capacitors for high insertion loss in signal, power and coaxial contacts… **FC38-FC48**

Micro D Series Connectors allow designers to incorporate EMI filtering into even smaller packages… **FC49-FC53**

Datacom Connectors including modular jack, miniature ribbon and mini-DIN protect critical datacom lines… **FC54-FC57**

Hooded Strain Reliefs for shock protection from exposed wires and short circuits… **FC60**

Performance Specifications & Board/Panel Cutouts… **FC62-FC64**

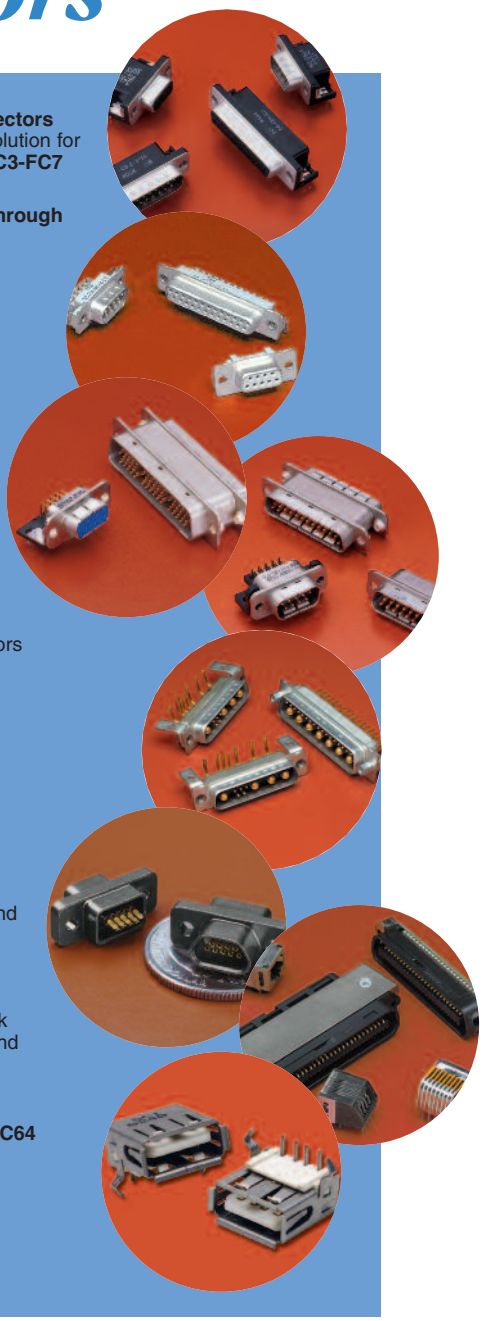

Advantages of a Filtered Connector

- **Low ground impedance –** Full ground plate and metallic shell provide minimal impedance and superior performance compared to on-board filter with high impedance
- **Eliminate re-radiation –** Filtered connector at interface leaves no path for bypassing the filter
- **Ground plane shielding –** API's filtered connector ground planes shield the box even at the connector port
- **Efficient space utilization –** Filters located in the connectors provide additional space on PCB board
- **Consistent performance –** Filtered connectors provide more consistent pin to pin performance
- **Fewer components –** Filtered connectors reduce component count creating cost savings
- **Reliability –** API tests 100% of filters, on-board filters are usually spot tested

API TECHNOLOGIES • 8061 Avonia Rd. • Fairview, PA 16415 • Ph: 814-474-1571 • Fax: 814-474-3110 • eis.apitech.com
API TECHNOLOGIES' SPECTRUM CONTROL GmbH • Hansastrasse 6 • 91126 Schwabach, Germany • Phone: (49)-9122-795-0 • Fax: (49)-9122-795-58

api technologies corp.
Spectrum Control

Advantages of API Filtered Connectors

API Technologies' Spectrum Control brand offers the industry's most complete line of filtered D-subminiature connectors. Our connectors are available in shell sizes from 9 to 50, and come in many termination types, such as PC mount, wire wrap, solder cup and 90° PCB. In addition, API offers a wide range of filtering options, allowing you to find the right balance between performance and economy.

EMI filter options include our Pi filter configuration, which provides 45-60 dB per decade slope to insertion loss curve, our capacitive-only C filters that provide cost-effective EMI attenuation, ferrite filtered series F connectors (designed for filtering in situations that do not tolerate capacitive loading of circuit), as well as our series 500 connectors, with small .318" footprints.

The construction of our high performance Series 600 and 700 connectors features a one-piece zinc diecast shell, which is subsequently nickel-plated. Each filter is constructed with 360° grounding with ground plate, and our patented coaxial springs ensure ground continuity. And with API's advanced in-house ceramic tube design, you'll get a reliable, high performance filter from start to finish.

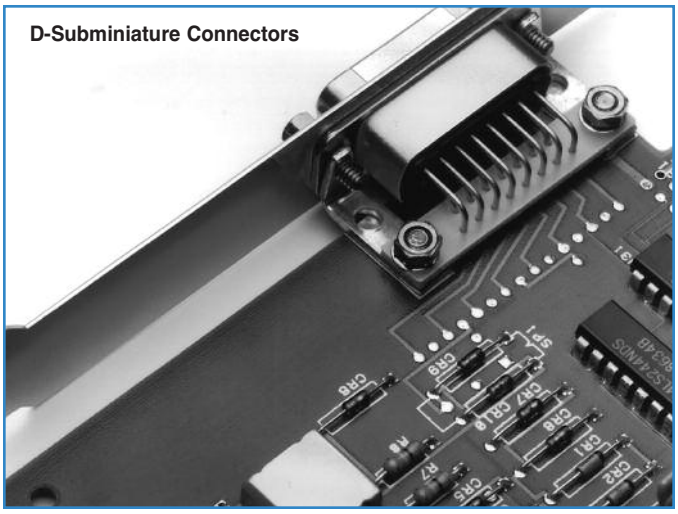

D-Subminiature Connectors

Advantages of an API Filtered Connector

- **Low ground impedance –** Full ground plate and metallic shell provide minimal impedance and superior performance compared to on-board filter with high impedance
- **Eliminate re-radiation –** Filtered connector at interface leaves no path for bypassing the filter
- **Ground plane shielding –** API filtered connector ground planes shield the box even at the connector port
- **Efficient space utilization –** Filters located in connector provides additional space on PCB board
- **Consistent performance –** Filtered connectors provide more consistent pin to pin performance
- **Fewer components –** Filtered connectors reduce component count creating cost savings
- **Reliability –** API tests 100% of filters, on-board filters are usually spot tested

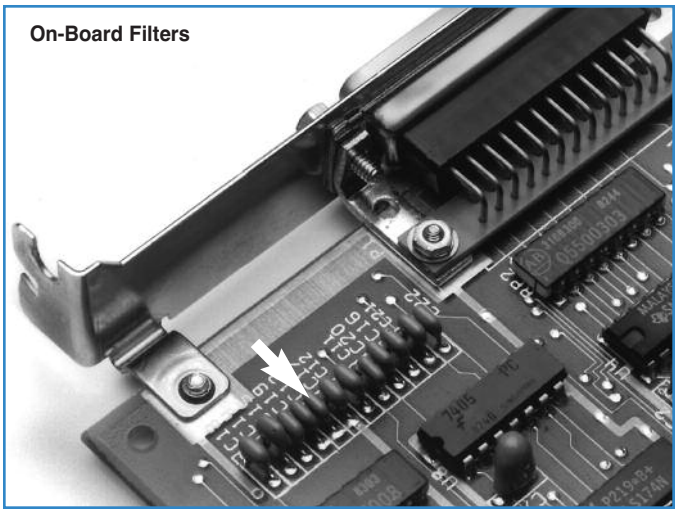

On-Board Filters

API TECHNOLOGIES • 8061 Avonia Rd. • Fairview, PA 16415 • Ph: 814-474-1571 • Fax: 814-474-3110 • eis.apitech.com
API TECHNOLOGIES' SPECTRUM CONTROL GmbH • Hansastrasse 6 • 91126 Schwabach, Germany • Phone: (49)-9122-795-0 • Fax: (49)-9122-795-58

api technologies corp.
Spectrum Control

Series F Ferrite Filtered Connectors

The Series F filtered D-subminiature connectors incorporate a solid slab of ferrite material as the filtering element. This rugged one-piece design provides a com-pact connector that is a drop-in replacement for standard connectors. The ferrite material has been chosen for optimum filtering performance in the 10 to 300 MHz range.

Series F Applications

- Personal computers, microcomputer-applied products and peripheral/terminal equipment
- Eliminates common-mode noise along data lines in data communication terminals and digital equipment

Features

- Low cost, high performance ferrite filter
- No distortion of wave forms
- Replaces individual ferrite bead filters, saving cost and space
- Provides both pin to ground and pin to pin filtering
- Effective in helping meet requirements of FCC, VDE, EN55022 and Japan's VCCI
- Short, space saving .318" footprint
- Interchangeable with standard D-subminiature connectors
- Can be installed directly over PCB trace pattern with no shorting
- 4–40 UNC locking insert eliminates loose hardware
- Metal shielding front shell
- Gold plated contacts
- RoHS compliant versions available (replace 56- with 56F)

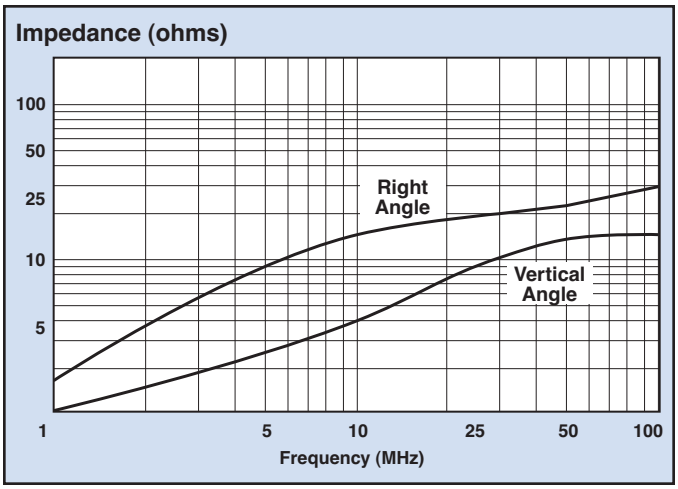

Mechanical Specifications

Front Shell . . . . . Steel (Tin plated)

Housing . . . . . UL 94V-0 Rated thermoplastic, black

Contacts . . . . . Phosphor bronze (sockets) or brass (pins)

Contact Plating . . . . . Gold Flash (<10µ in.) over nickel

Operating Temperature . . . . . –40°C to +105°C

Electrical Specifications

Frequency (MHz)	Impedance (Ohms)	
	Right Angle	Vertical
1	2	1
10	15	6
30	20	10
50	23	12
100	27	15

Frequency Range . . . . . 10 – 300 MHz

Current Rating . . . . . 5 Amps

Dielectric Withstand Voltage . . 1000 VAC for one minute

Insulation Resistance . . . . . 1000 megohms Min. @ 500VDC

API TECHNOLOGIES • 8061 Avonia Rd. • Fairview, PA 16415 • Ph: 814-474-1571 • Fax: 814-474-3110 • eis.apitech.com
API TECHNOLOGIES' SPECTRUM CONTROL GmbH • Hansastrasse 6 • 91126 Schwabach, Germany • Phone: (49)-9122-795-0 • Fax: (49)-9122-795-58

Series F Ferrite Filtered Connectors

Pin Contact – Right Angle Mount

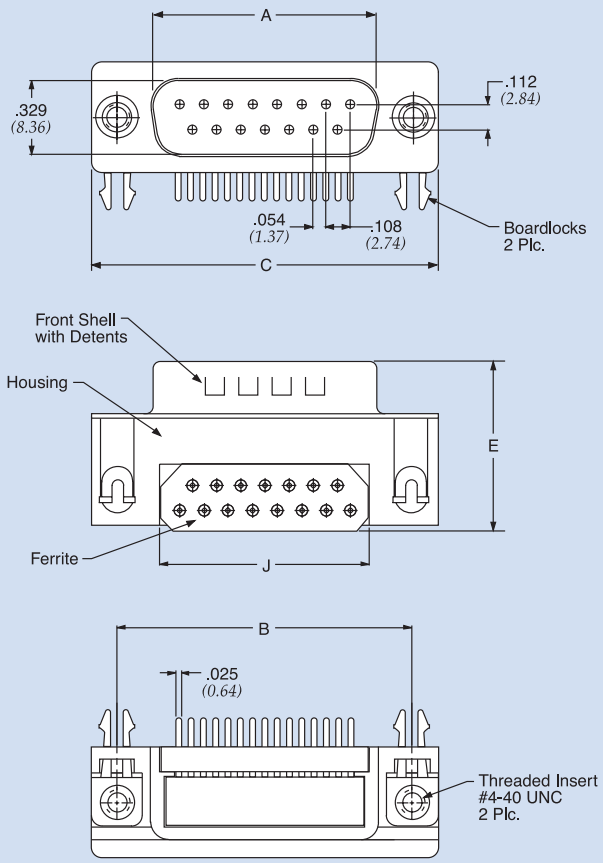

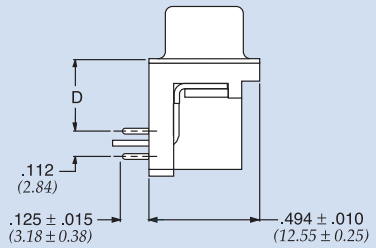

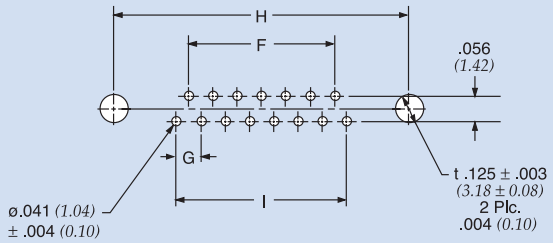

PC Board Mounting Dimensions

Part Number	Description	Typ. Impedance (Ohms) 30 MHz	Typ. Impedance (Ohms) 100 MHz	Frequency Range	A+/- 0.010 (0.25)	B +/- 0.005 (0.13)	C +/- 0.015 (0.38)	D +/- 0.010 (0.25)	E +/- 0.015 (0.38)	F +/- 0.005 (0.13)	G +/- 0.004 (0.10)	H +/- 0.005 (0.13)	I +/- 0.005 (0.13)	J +/- 0.005 (0.13)
€ 56-402-001	D-Sub 9 pin	20	27	10 MHz to 300 MHz	0.666 (16.92)	0.984 (25.00)	1.213 (30.81)	0.318 (8.08)	0.751 (19.10)	0.324 (8.22)	0.108 (2.74)	0.984 (25.00)	0.432 (10.98)	0.606 (15.40)
€ 56-412-001	D-Sub 15 pin				0.994 (25.25)	1.312 (33.32)	1.541 (39.14)	0.318 (8.08)	0.751 (19.10)	0.648 (16.46)	0.108 (2.74)	1.312 (33.32)	0.756 (19.20)	0.929 (23.60)
€ 56-422-001	D-Sub 25 pin				1.534 (38.96)	1.852 (47.04)	2.088 (53.04)	0.318 (8.08)	0.751 (19.10)	1.196 (30.36)	0.110 (2.76)	1.852 (47.04)	1.304 (31.12)	1.476 (37.50)

€ Also available through API's authorized European distributors/agents.

Dimensions in inches *(mm)*

api technologies corp.
Spectrum Control

Series F Ferrite Filtered Connectors

*High-Density

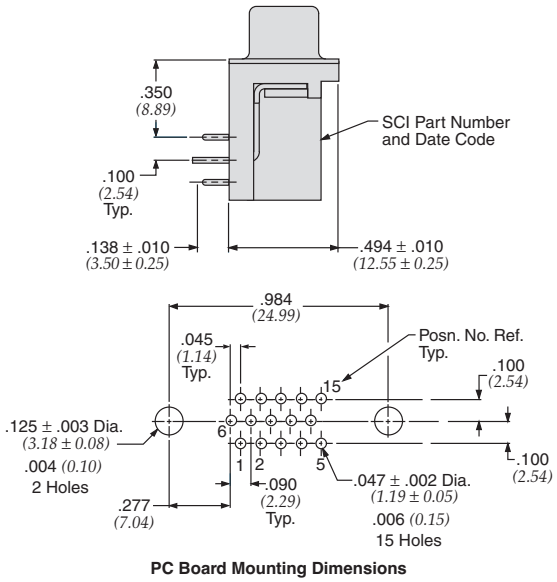

PC Board Mounting Dimensions

Socket Contact – Right Angle Mount

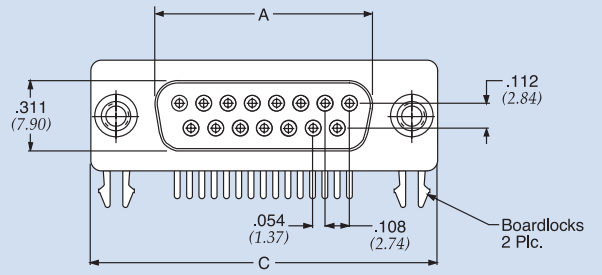

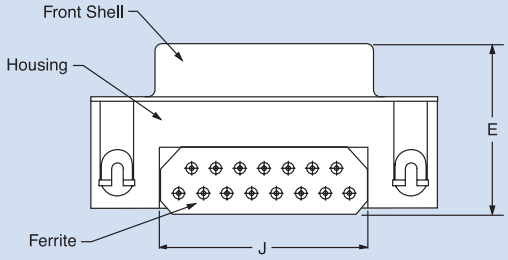

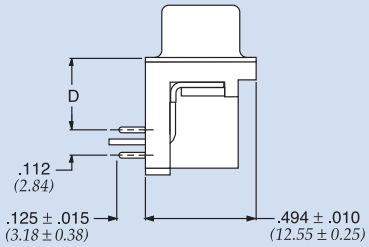

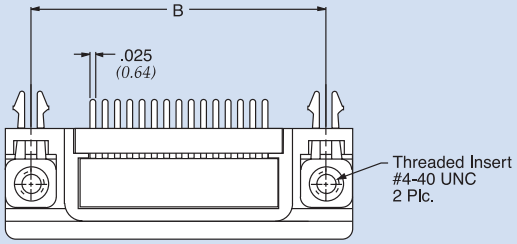

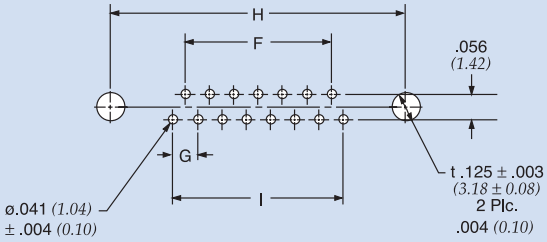

PC Board Mounting Dimensions

Part Number	Description	Typ. Impedance (Ohms) 30 MHz	Typ. Impedance (Ohms) 100 MHz	Frequency Range	A+/- 0.010 (0.25)	B +/- 0.005 (0.13)	C +/- 0.015 (0.38)	D +/- 0.010 (0.25)	E +/- 0.015 (0.38)	F +/- 0.005 (0.13)	G +/- 0.004 (0.10)	H +/- 0.005 (0.13)	I +/- 0.005 (0.13)	J +/- 0.005 (0.13)
€ 56-404-001	D-Sub 9 socket	20	27	10 MHz to 300 MHz	0.643 (16.33)	0.984 (25.00)	1.213 (30.81)	0.318 (8.08)	0.755 (19.20)	0.324 (8.22)	0.108 (2.74)	0.984 (25.00)	0.432 (10.98)	0.606 (15.40)
€ 56-414-001	D-Sub 15 socket				0.971 (24.66)	1.312 (33.32)	1.541 (39.14)	0.318 (8.08)	0.755 (19.20)	0.648 (16.46)	0.108 (2.74)	1.312 (33.32)	0.756 (19.20)	0.929 (23.60)
€ 56-424-001	D-Sub 25 socket				1.511 (38.38)	1.852 (47.04)	2.088 (53.04)	0.318 (8.08)	0.755 (19.20)	1.196 (30.36)	0.110 (2.76)	1.852 (47.04)	1.304 (31.12)	1.476 (37.50)
€ 56-414-001-HD	Hi-Density 15 socket	16	26		0.643 (16.33)	0.984 (25.00)	1.213 (30.81)	* See inset drawing						

€ Also available through API's authorized European distributors/agents.

Dimensions in inches *(mm)*

API TECHNOLOGIES • 8061 Avonia Rd. • Fairview, PA 16415 • Ph: 814-474-1571 • Fax: 814-474-3110 • eis.apitech.com
API TECHNOLOGIES' SPECTRUM CONTROL GmbH • Hansastrasse 6 • 91126 Schwabach, Germany • Phone: (49)-9122-795-0 • Fax: (49)-9122-795-58

Series F Ferrite Filtered Connectors

Pin Contact – Vertical Mount

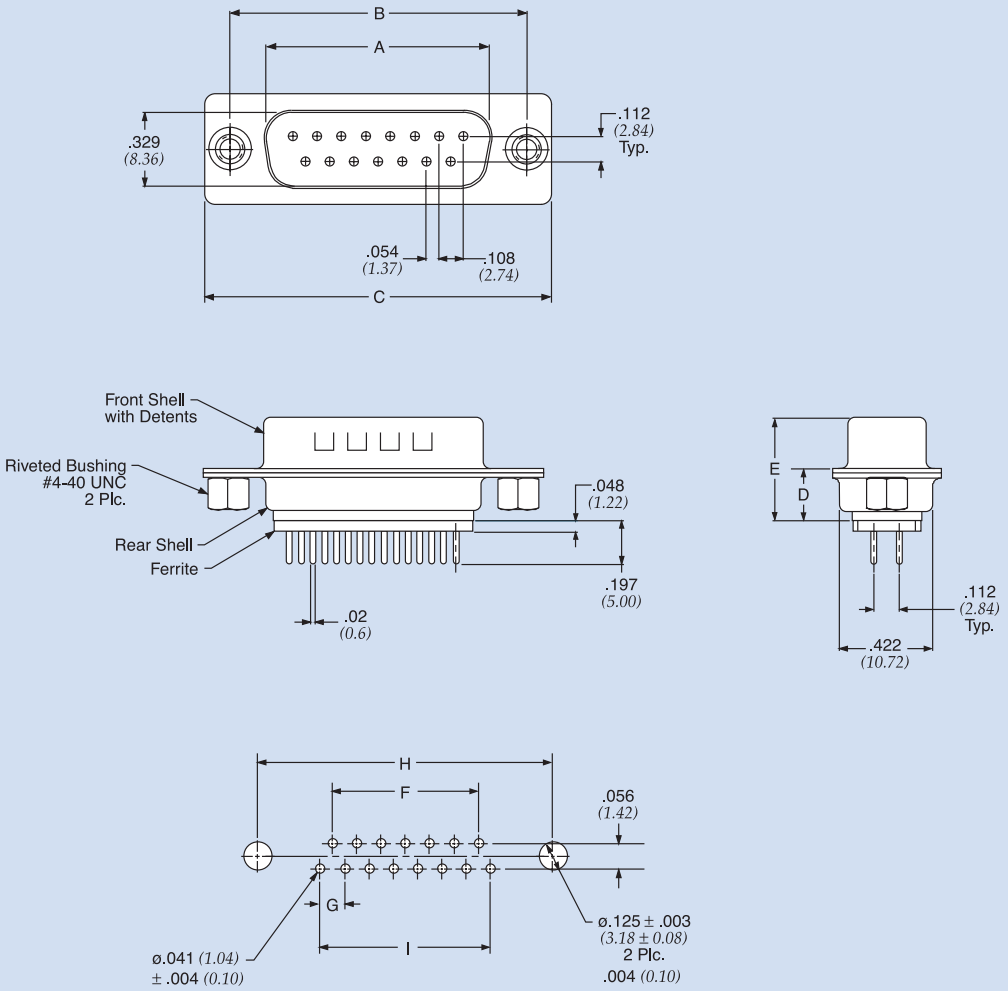

PC Board Mounting Dimensions

Part Number	Description	Typ. Impedance (Ohms) 30 MHz	Typ. Impedance (Ohms) 100 MHz	Frequency Range	A+/- 0.010 (0.25)	B +/- 0.005 (0.13)	C +/- 0.015 (0.38)	D +/- 0.010 (0.25)	E +/- 0.015 (0.38)	F +/- 0.005 (0.13)	G +/- 0.004 (0.10)	H +/- 0.005 (0.13)	I +/- 0.005 (0.13)
56-407-001	D-Sub 9 pin	10	15	10 MHz to 300 MHz	0.666 (16.92)	0.984 (25.00)	1.213 (30.81)	0.236 (5.99)	0.468 (11.88)	0.324 (8.22)	0.108 (2.74)	0.984 (25.00)	0.432 (10.98)
56-417-001	D-Sub 15 pin				.994 (25.25)	1.312 (33.32)	1.541 (39.14)	0.236 (5.99)	0.468 (11.88)	0.648 (16.46)	0.108 (2.74)	1.312 (33.32)	0.756 (19.20)
56-427-001	D-Sub 25 pin				1.534 (38.96)	1.852 (47.04)	2.088 (53.04)	0.236 (5.99)	0.468 (11.88)	1.196 (30.36)	0.110 (2.76)	1.852 (47.04)	1.304 (31.12)

Dimensions in inches *(mm)*

Series F Ferrite Filtered Connectors

Socket Contact – Vertical Mount

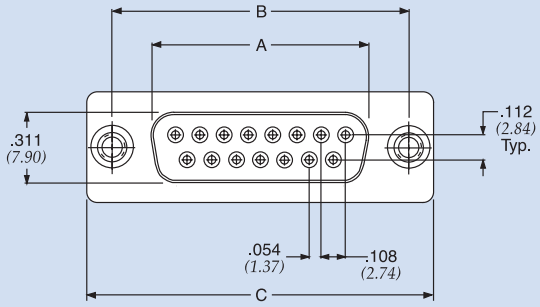

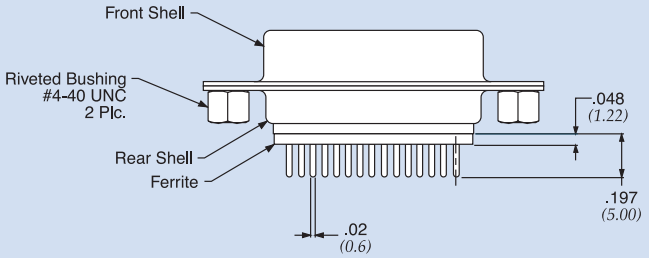

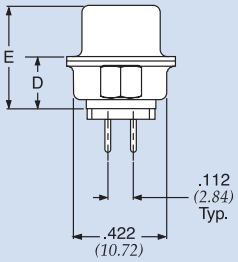

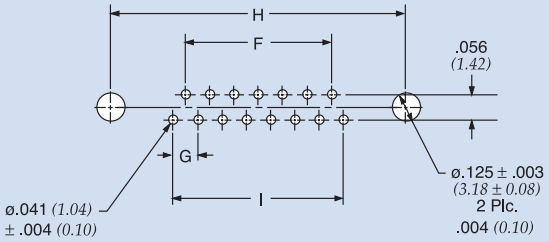

PC Board Mounting Dimensions

Part Number	Description	Typ. Impedance (Ohms) 30 MHz	Typ. Impedance (Ohms) 100 MHz	Frequency Range	A+/- 0.010 (0.25)	B +/- 0.005 (0.13)	C +/- 0.015 (0.38)	D +/- 0.010 (0.25)	E +/- 0.015 (0.38)	F +/- 0.005 (0.13)	G +/- 0.004 (0.10)	H +/- 0.005 (0.13)	I +/- 0.005 (0.13)
56-403-001	D-Sub 9 socket	10	15	10 MHz to 300 MHz	0.643 (16.33)	0.984 (25.00)	1.213 (30.81)	0.236 (5.99)	0.472 (11.98)	0.324 (8.22)	0.108 (2.74)	0.984 (25.00)	0.432 (10.98)
56-413-001	D-Sub 15 socket				.971 (24.66)	1.312 (33.32)	1.541 (39.14)	0.236 (5.99)	0.472 (11.98)	0.648 (16.46)	0.108 (2.74)	1.312 (33.32)	0.756 (19.20)
56-423-001	D-Sub 25 socket				1.511 (38.38)	1.852 (47.04)	2.088 (53.04)	0.236 (5.99)	0.472 (11.98)	1.196 (30.36)	0.110 (2.76)	1.852 (47.04)	1.304 (31.12)

Dimensions in inches *(mm)*

api technologies corp.
Spectrum Control

Series 500 Low Profile Filtered Connectors

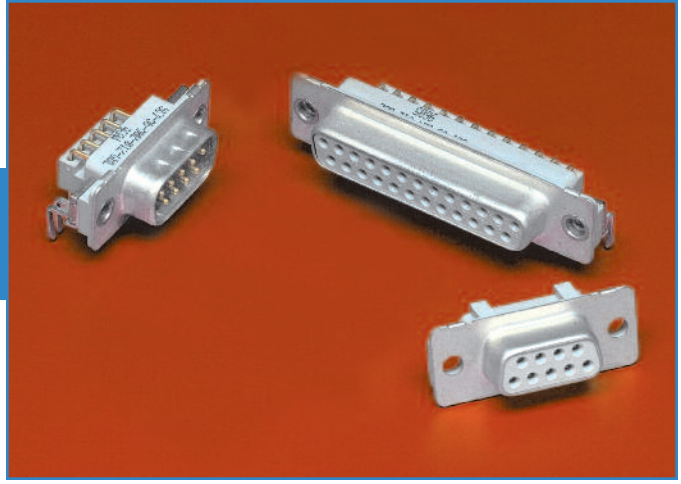

API's Spectrum Control brand of Series 500 are cost effective, highly reliable EMI filtered D-subminiature connectors that feature a .318" footprint for 90 degree PCB connectors and a low profile housing on straight PCB connectors. Series 500 filtered D-subs are "drop-in" replacements for standard unfiltered D-sub connectors.

The ability of these connectors to achieve EMI filtering within the smaller footprint is the result of technical advances in ceramic capacitors. Series 500 connectors use tubular capacitors for high performance EMI filtering. Quality features for these connectors include board lock mounting, metal front shells and gold plated contacts.

Series 500 capacitive filtered D-sub connectors are an ideal solution to FCC/EC/VCCI emissions problems. These connectors are designed to protect equipment from external EMI noise and eliminate system glitches.

Series 500 Applications

- Personal computers
- Industrial process equipment
- Graphics workstations
- PBX telecommunications equipment
- Cellular base stations and medical electronics

Features

- "Drop-in" replacements for unfiltered D-subminiatures
- Compact design, featuring .318" footprint
- Tubular feed-through capacitors provide filtering superior to on-board components
- Ground plane design provides EMI shielding
- Full interchangeability; based on MIL-C-24308
- Each connector position is tested 100% for critical electrical parameters to ensure consistent performance
- Insulators are UL recognized UL94-V0 flammability rated
- 9, 15 and 25 shell sizes
- Available with board lock feature and 4-40 mounting threads
- Selective filtering available
- UL/CSA approved
- Greater than 40 dB filtering up through 1 GHz without resonances
- Bi-directional control of EMI at the I/O ports

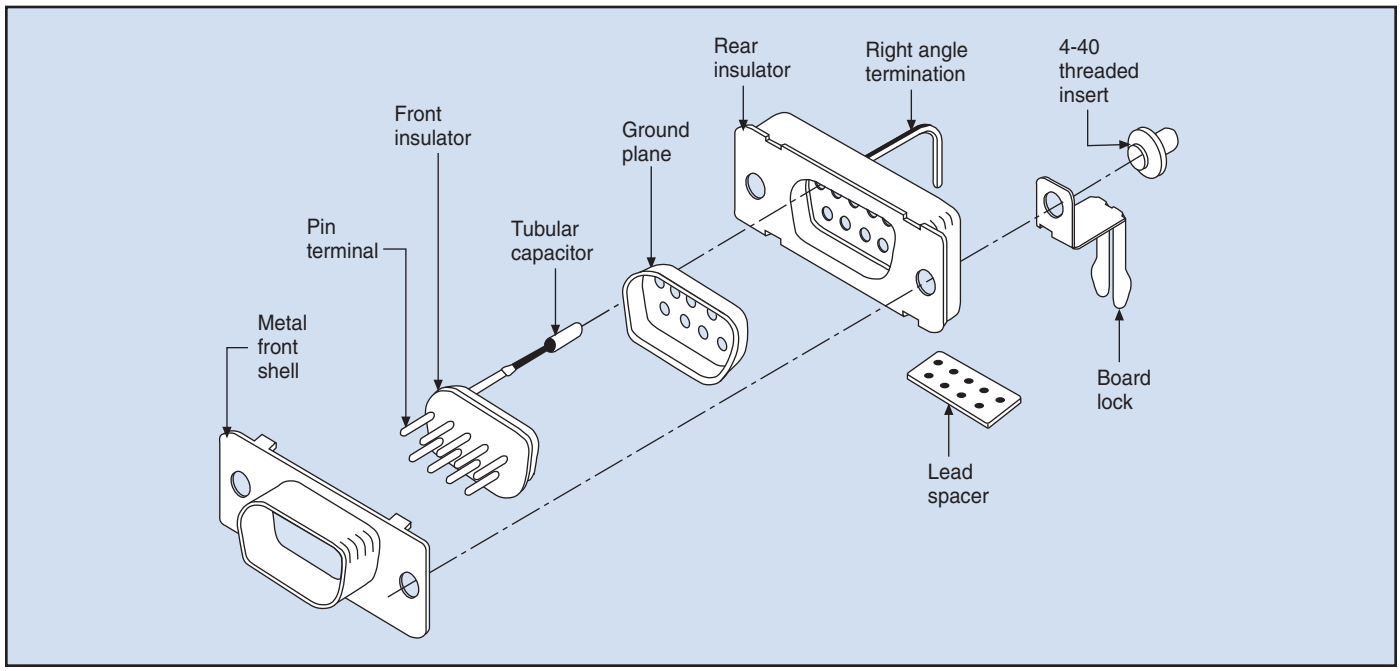

API TECHNOLOGIES • 8061 Avonia Rd. • Fairview, PA 16415 • Ph: 814-474-1571 • Fax: 814-474-3110 • eis.apitech.com
API TECHNOLOGIES' SPECTRUM CONTROL GmbH • Hansastrasse 6 • 91126 Schwabach, Germany • Phone: (49)-9122-795-0 • Fax: (49)-9122-795-58

api technologies corp.
Spectrum Control

Series 500 Low Profile Filtered Connectors

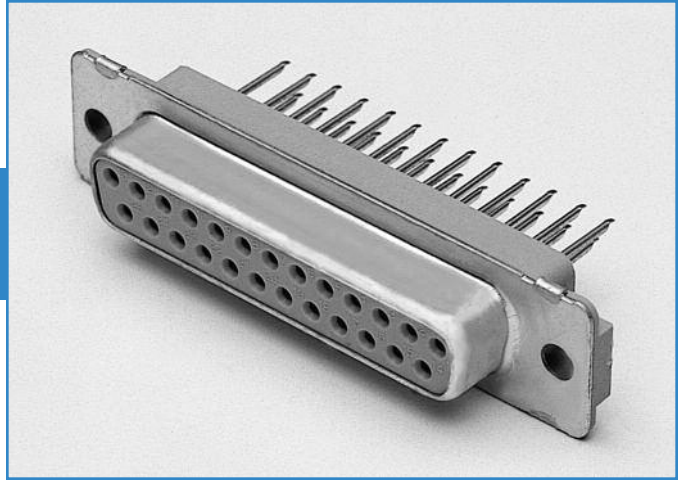

Mechanical Specifications

Shell . . . . . Steel, tin plated

Insulators . . . . . Glass-filled polyester, flammability UL94V-O

Pin Contacts . . . . . Copper alloy CA725, 15 microinch *(0.38 µm)* gold plated* over nickel

Socket Contacts . . . . . Copper alloy CA725, 30 microinch *(0.76 µm)* gold plated* over nickel

**Heavier gold plating available upon request.*

Ground Plane. . . . . Phosphor bronze, nickel plated

Operating Temperature. . . . . -40°C to +125°C

Capacitors . . . . . Proprietary barium titanate ceramic formulations

Other environmental tests such as shock, vibration, humidity, etc. are performed as detailed in our filtered connector performance specifications on page FC81.

Electrical Specifications

Current Rating. . . . . 5 Amps

RF Current Rating. . . . . 0.3 Amps

Contact Resistance . . . . . 10 milliohms maximum

Capacitance . . . . . 120, 440, 840, 1000, 1500 pF ±30%

Working Voltage . . . . . 100 VDC

Dielectric Withstanding Voltage . . . . . 300 VDC

Insulation Resistance . . . . . 1 Gohm minimum

UL Recognized. . . . . Under category of communication circuit accessories, File #E149046

Typical Insertion Loss

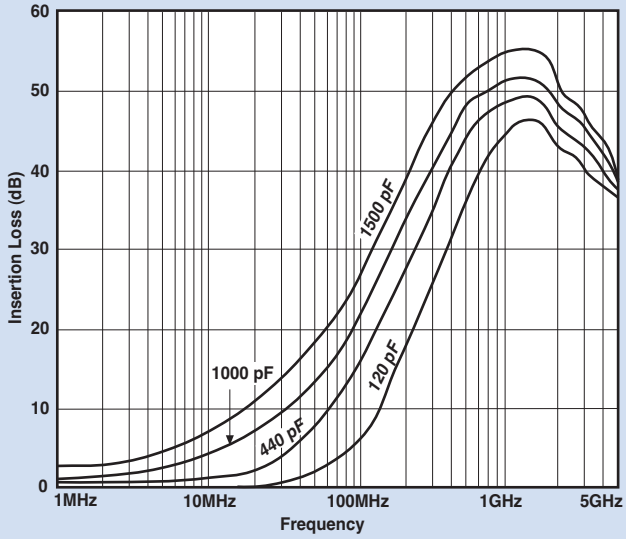

Above curves represent application of proper grounding fundamentals. For assistance consult API.

840 pF is typically within 2 dB of 1000 pF curve.

Filter Performance

Cap. (pF) Value ±30%	3 dB Cut-off Freq. (MHz)	Insertion Loss (dB)					
		20 MHz	100 MHz	500 MHz	1 GHz	2 GHz	5 GHz
120	40	–	4	21	26	26	20
440	11	3	15	27	33	32	25
840	6	6	19	32	38	37	25
1000	3	8	21	35	41	38	25
1500	2	10	25	40	47	42	25

Insertion loss measured per MIL-STD-220, no load, 50 ohm source and load. Above data represents guaranteed minimum.

api technologies corp.
Spectrum Control

Series 500 Low Profile Filtered Connectors

Pin Contact *(plug)*

Straight PC Mount

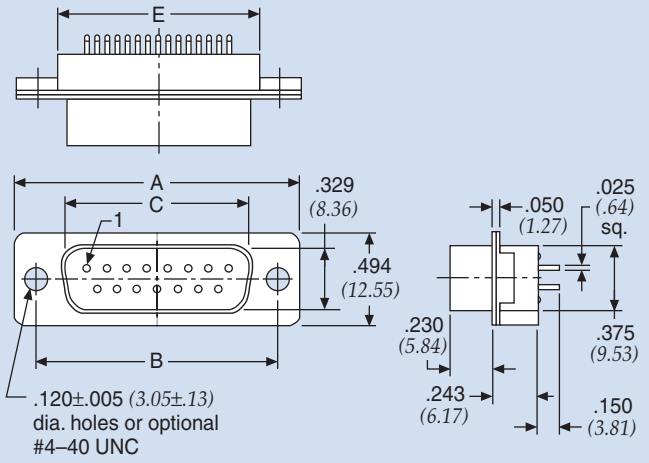

90° PC Mount

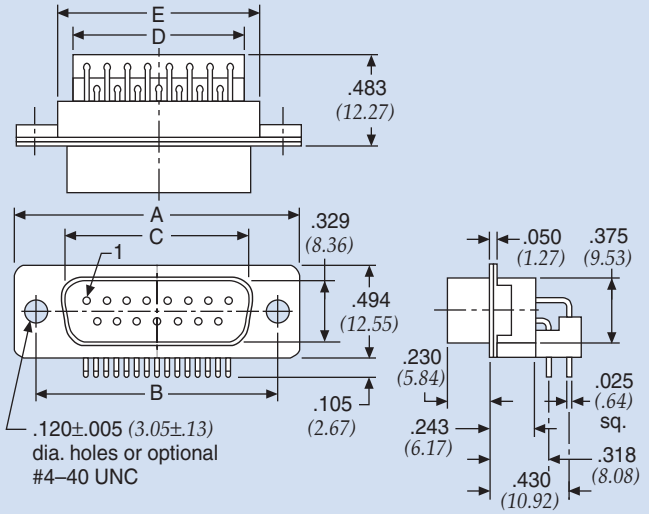

Size	A	B	C	D	E
9	1.213 *(30.81)*	0.984 *(24.99)*	0.666 *(16.92)*	0.540 *(13.72)*	0.748 *(19.00)*
15	1.541 *(39.14)*	1.312 *(33.32)*	0.994 *(25.25)*	0.867 *(22.02)*	1.076 *(27.33)*
25	2.088 *(53.04)*	1.852 *(47.04)*	1.534 *(38.96)*	1.412 *(35.86)*	1.616 *(41.05)*

Standard Tolerance = ±.015 *(0.38)*

Dimensions in inches *(mm)*

Socket Contact *(receptacle)*

Straight PC Mount

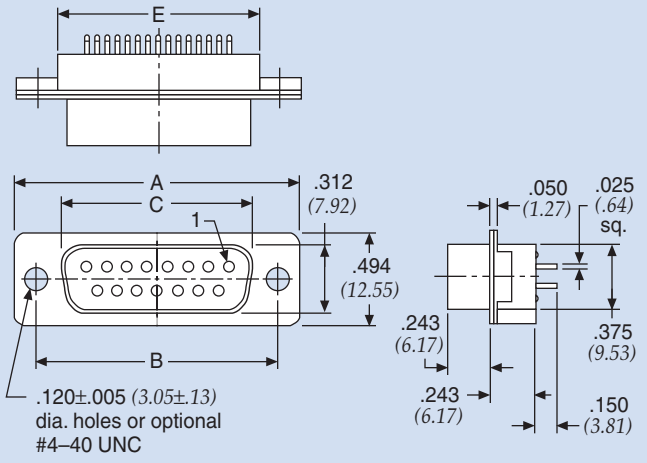

90° PC Mount

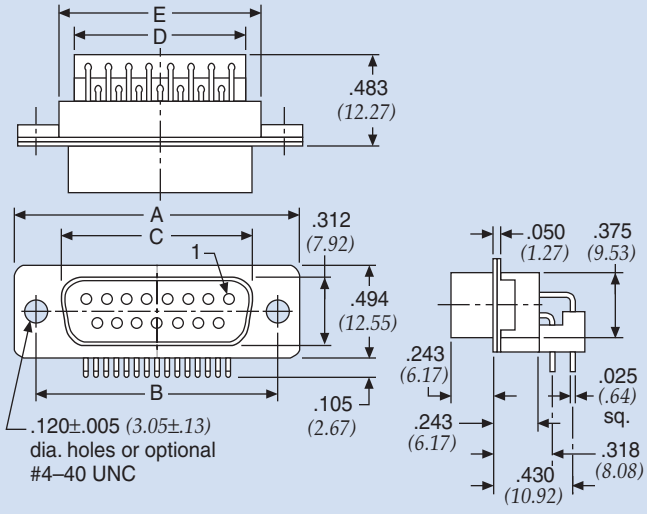

Size	A	B	C	D	E
9	1.213 *(30.81)*	0.984 *(24.99)*	0.642 *(16.31)*	0.540 *(13.72)*	0.748 *(19.00)*
15	1.541 *(39.14)*	1.312 *(33.32)*	0.970 *(24.64)*	0.867 *(22.02)*	1.076 *(27.33)*
25	2.088 *(53.04)*	1.852 *(47.04)*	1.510 *(38.35)*	1.412 *(35.86)*	1.616 *(41.05)*

Standard Tolerance = ±.015 *(0.38)*

Dimensions in inches *(mm)*

api technologies corp.
Spectrum Control

Series 500 Low Profile Filtered Connectors

Ordering Information

Example: **56-524-013-GBL**

This part number represents a Series 500 filtered D-sub connector with 25 contacts, socket to 90° PCB mount configuration. The filter has a capacitance value of 1000 pF and the connector includes a grounded board lock.

For special needs or combinations of features, contact API engineering.

56 - 5 2 4 - 013 - GBL

Filtered D-sub Connectors

Series 500 Connectors

Shell Size/ Number of Contacts
- **0 -** 9 size
- **1 -** 15 size
- **2 -** 25 size

Contact Type/Termination
- **2 -** Pin to 90° PCB mount
- **3 -** Socket to straight PCB mount
- **4 -** Socket to 90° PCB mount
- **7 -** Pin to straight PCB mount

Capacitance Value
- **010 -** 120 pF
- **011 -** 440 pF
- **012 -** 840 pF
- **013 -** 1000 pF
- **014 -** 1500 pF

Mounting or Hardware Options
- **TI -** 4-40 threads on mounting flange (.120" (3.05mm) hole if not selected)
- **GBL -** Grounded board lock, includes 4-40 threads (available only on 90° PCB)
- **GBLF -** Grounded board lock and ferrite slab, provides the enhanced performance of an (LC) filter (available only on 90° PCB)

– - Standard connector
F - RoHS compliant version

GBL Option

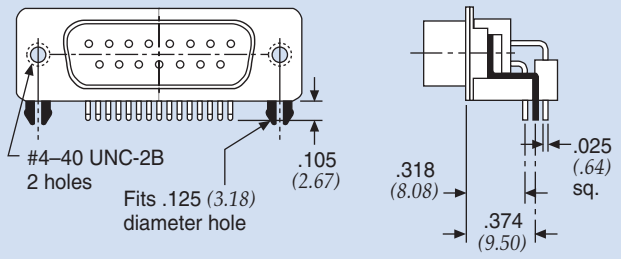

Features
- Snap-in retention to PC board, requires no hardware
- Ensures low ground impedance for superior filtering
- 4-40 threads on mounting flange eliminate loose hardware

Dimensions in inches *(mm)*

Board Layout

Typical Layout for .318" (8.08) Footprint

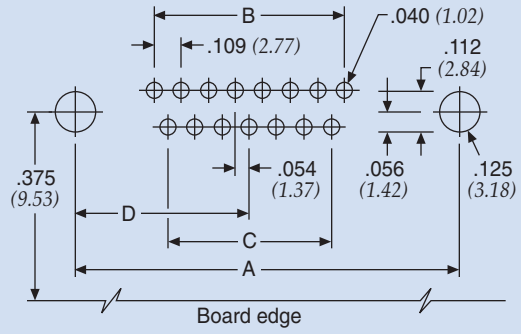

Shell Size	A	B	C	D
9	.984 (24.99)	.436 = 4 x .109 (11.07 = 4 x 2.77)	.327 = 3 x .109 (8.31 = 3 x 2.77)	.492 (12.50)
15	1.312 (33.32)	.763 = 7 x .109 (19.38 = 7 x 2.77)	.654 = 6 x .109 (16.61 = 6 x 2.77)	.656 (16.66)
25	1.852 (47.04)	1.308 = 12 x .109 (33.22 = 12 x 2.77)	1.199 = 11 x .109 (30.45 = 11 x 2.77)	.926 (23.52)

Dimensions in inches *(mm)*

api technologies corp.
Spectrum Control

Series 600 High-Density Filtered Connectors

The miniaturization of electronic systems and sub-systems is pushing designers to increase circuit densities within smaller packages. To address this growing need, API Technologies' Spectrum Control brand has developed a line of filtered High-Density D-subminiature connectors. This new line of connectors incorporates the high performance and reliable filtering of API's standard D-subs in the High-Density format.

Features

- Connectors designed to MIL-C-24308
- Capacitance values from 85 pF to 4000 pF
- Filter type feed-through C
- Selectively specify and filter each contact position
- Available in feed-through capacitive configurations

Mechanical Specifications:
Same as Series 700 connectors, page FC21.

Typical Insertion Loss

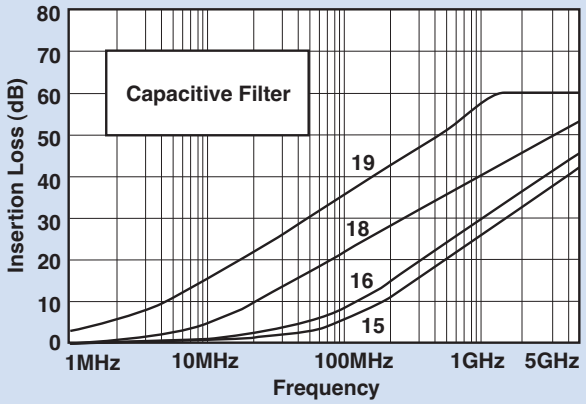

Above curves represent application of proper grounding fundamentals, for assistance consult with Spectrum Control.

Insertion loss measured per MIL-STD-220, no load, 50 ohm source and load.

Electrical Specifications

Current Rating . . . . 3 Amps
RF Current Rating . . 0.3 Amps
Contact Resistance . . 15 milliohms maximum
UL Recognized . . . . . Under category of communication circuit accessories, File #E149046

Electrical Specifications: High-Density Connectors

Filter Designations	Filter Circuits	Capacitance Value	Capacitance Tol.	3 dB Cut-off Frequency Max. (MHz)	Dielectric Withstanding Voltage	Working Voltage DC -55°C to +125°C	Minimum Insertion Loss - Decibels (dB) 5 MHz	10 MHz	20 MHz	50 MHz	100 MHz	200 MHz	500 MHz	1 GHz	2 GHz	5 GHz
15	C	85 pF	±25%	60	300V	100V	—	—	—	—	1	6	16	21	22	20
16		180 pF	±25%	28	300V	100V	—	—	—	1	8	10	18	25	26	24
18		1000 pF	±25%	5.1	300V	100V	—	3	8	14	20	25	32	35	41	39
19		4000 pF	±25%	1.3	300V	100V	8	13	19	26	31	37	45	48	52	47

Filter designation "G" for grounded contacts, "I" for insulated (not filtered) contacts.
Filter designation "O" for omitted contact and no hole in ground plane.

Above data represents guaranteed minimum.

Ordering Information

Example: **56-605-015-LI**

This part number represents a Series 600 Hi-Density filtered D-Sub connector with 15 contacts, pin-socket adapter configuration. The FT filters have a capacitance value of 85 pF and the connector includes 4-40 locking inserts.

56 - 6 0 5 - 0 15 - LI

D-Sub Connector

Hi-Density
- Standard connector
F - RoHS compliant version

Shell Size**
0 = 15
1 = 26
2 = 44
3 = 62
4 = 78

Contact/Termination
1 - Pin to solder cup
2 - Pin to 90° PCB mount*
3 - Socket to PCB mount
4 - Socket to 90° PCB* mount
5 - Pin-socket adapter
7 - Pin to PCB mount

Special
0 = All positions same
9 = Special loading

** Some shell sizes require minimum order quantity. Consult API for details.

Filter Designation
15 - 85 pF FT
16 - 180 pF FT
18 - 1,000 pF FT
19 - 4,000 pF FT
20 - Insulated contact

Options
LI = 4-40 inserts
S = Solder dip tails
50G = µ gold
GBL = Grounding board lock

* Required on right angle parts

Note: VGA adapters also available. Consult factory

API TECHNOLOGIES • 8061 Avonia Rd. • Fairview, PA 16415 • Ph: 814-474-1571 • Fax: 814-474-3110 • eis.apitech.com
API TECHNOLOGIES' SPECTRUM CONTROL GmbH • Hansastrasse 6 • 91126 Schwabach, Germany • Phone: (49)-9122-795-0 • Fax: (49)-9122-795-58

api technologies corp.
Spectrum Control

Series 600 High-Density Filtered Connectors

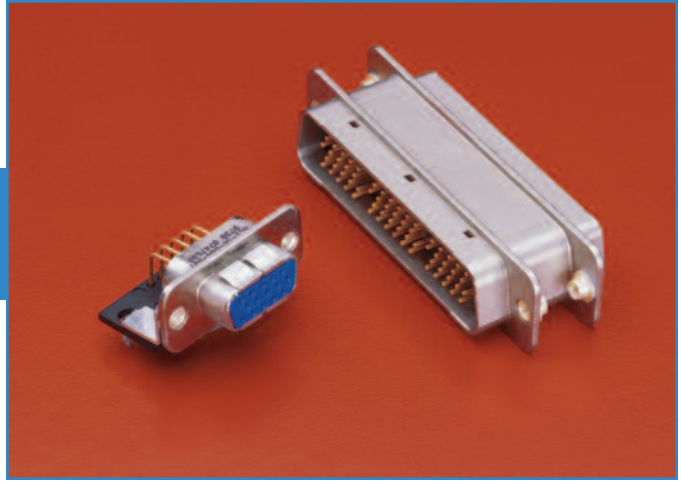

Pin/Socket Adapter

Size	A	B	C	D	E	F	G
15	1.213 (30.81)	.984 (24.99)	.640 (16.26)	.304 (7.72)	.505 (12.83)	.666 (16.92)	.333 (8.46)
26	1.541 (39.14)	1.312 (33.32)	.968 (24.59)	.304 (7.72)	.505 (12.83)	.994 (25.25)	.333 (8.46)
44	2.088 (53.04)	1.852 (47.04)	1.508 (38.30)	.304 (7.72)	.505 (12.83)	1.534 (38.96)	.333 (8.46)
62	2.729 (69.32)	2.500 (63.50)	2.156 (54.76)	.304 (7.72)	.505 (12.83)	2.182 (55.42)	.333 (8.46)
78	2.635 (66.93)	2.406 (61.11)	2.062 (52.37)	.416 (10.57)	.615 (15.62)	2.079 (52.81)	.420 (11.18)

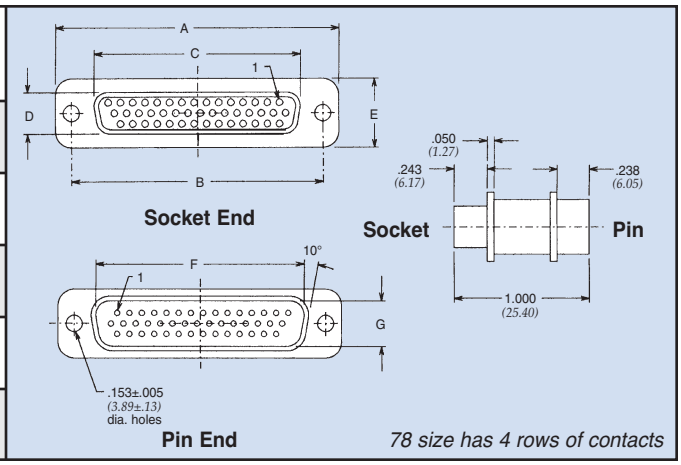

Pin or Socket to Solder Cup, PCB Mount and 90° PCB Mount

Size	A	B	C	D	E	F	G
15	1.213 (30.81)	.984 (24.99)	.505 (12.83)	.666 (16.92)	.333 (8.46)	.757 (19.23)	.420 (10.67)
26	1.541 (39.14)	1.312 (33.32)	.505 (12.83)	.994 (25.25)	.333 (8.46)	1.085 (27.56)	.420 (10.67)
44	2.088 (53.04)	1.852 (47.04)	.505 (12.83)	1.534 (38.96)	.333 (8.46)	1.625 (41.28)	.420 (10.67)
62	2.729 (69.32)	2.500 (63.50)	.505 (12.83)	2.182 (55.42)	.333 (8.46)	2.273 (57.73)	.420 (10.67)
78	2.635 (66.93)	2.406 (61.11)	.615 (15.62)	2.079 (52.81)	.440 (11.18)	2.170 (55.12)	.527 (13.39)

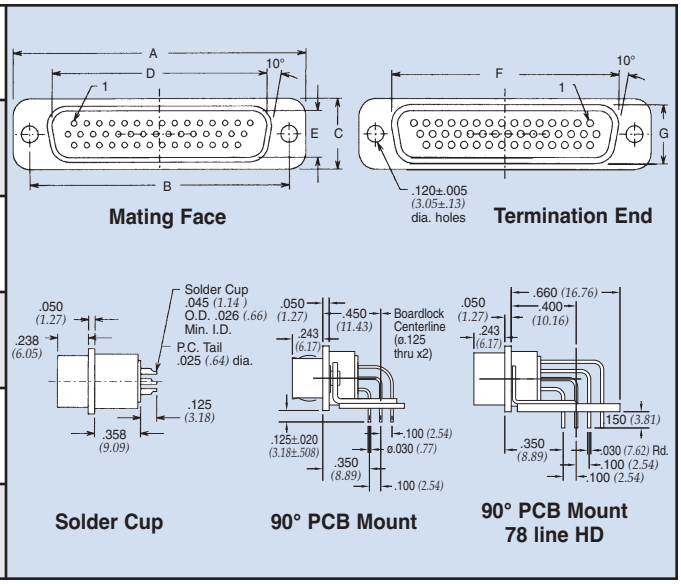

Dimensions in inches *(mm)*

api technologies corp.
Spectrum Control

High-Density Filtered Adapter for Telecommunications

Within the telecommunications industry, it has been standard practice to use an adapter (male/female) type of EMI filtered connector as the interface between the switching system electronics and the premise wiring. These filtered adapters provide effective containment of EMI compared to either D-subminiature or 50-position "ribbon" contact type connectors.

The following several factors have mandated the development of a new generation of filtered adapters.

Special Requirements

- Higher density wiring
- The need for more contacts, usually a multiple of 16
- Higher reliability contact geometries
- Bellcore TR-NWT-001089 requirements
  - 1000 volts AC withstand for one minute
  - 2500 volts spike surge testing
- Improved flammable resistant plastic insulators

API's Spectrum Control brand, in response to these unique requirements of the telecommunication industry, has developed a new high-density filtered adapter.

Features

- New ceramic technology and filter element construction to accept higher voltages
- Improved reliability compared to "ribbon" type connectors
- Integral ground plane and one-piece diecast housing for the highest level of EMI integrity
- More contacts/wires per square inch of panel space through high-density arrangements
- 64 contact positions standard, with 78 positions available by request in any filter combination

Mechanical Specifications

Shell . . . . . Zinc or aluminum diecast, nickel plated 150 µ inches *(3.81 µm)* min.

Insulators . . . . . Thermoplastic, UL94V-0

Contacts . . . . . One-piece, screw machined Copper alloy, contact area plated 50 µ inches *(1.27 µm)* gold over 50 µ inches *(1.27 µm)* nickel

Ground Plane . . . . . Brass, solder plated

Grounding Springs . . . . . Beryllium copper, tin plated per MIL-T-10727

Operating Temperature . . . . . -55°C to +125°C

Capacitor . . . . . High performance ceramic feed-through utilizing ultra low ESR design

Electrical Specifications

Rated Voltage . . . . . 100 VDC

Current Rating . . . . . 3 Amps

DC Resistance . . . . . 15 milliohm max.

Dielectric Withstanding Voltage . . . . . 1000 VRMS (FCC Part 68 test)

Capacitance . . . . . 1000 pF, ±25%

Voltage Surge . . . . . meets 2500 volts surge (10/1000) (See Wave form figure on next page)

API TECHNOLOGIES • 8061 Avonia Rd. • Fairview, PA 16415 • Ph: 814-474-1571 • Fax: 814-474-3110 • eis.apitech.com
API TECHNOLOGIES' SPECTRUM CONTROL GmbH • Hansastrasse 6 • 91126 Schwabach, Germany • Phone: (49)-9122-795-0 • Fax: (49)-9122-795-58

api technologies corp.
Spectrum Control

High-Density Filtered Adapter for Telecommunications

Filter Performance

Minimum Insertion Loss	
20 MHz	7 dB
50 MHz	14 dB
100 MHz	20 dB
500 MHz	32 dB
1 GHz	35 dB
2 GHz	41 dB
5 GHz	39 dB

Insertion loss measured per MIL-STD-220, no load, 50 ohm source and load. Above data represents guaranteed minimum.

Part Number for Ordering: #56-645-002

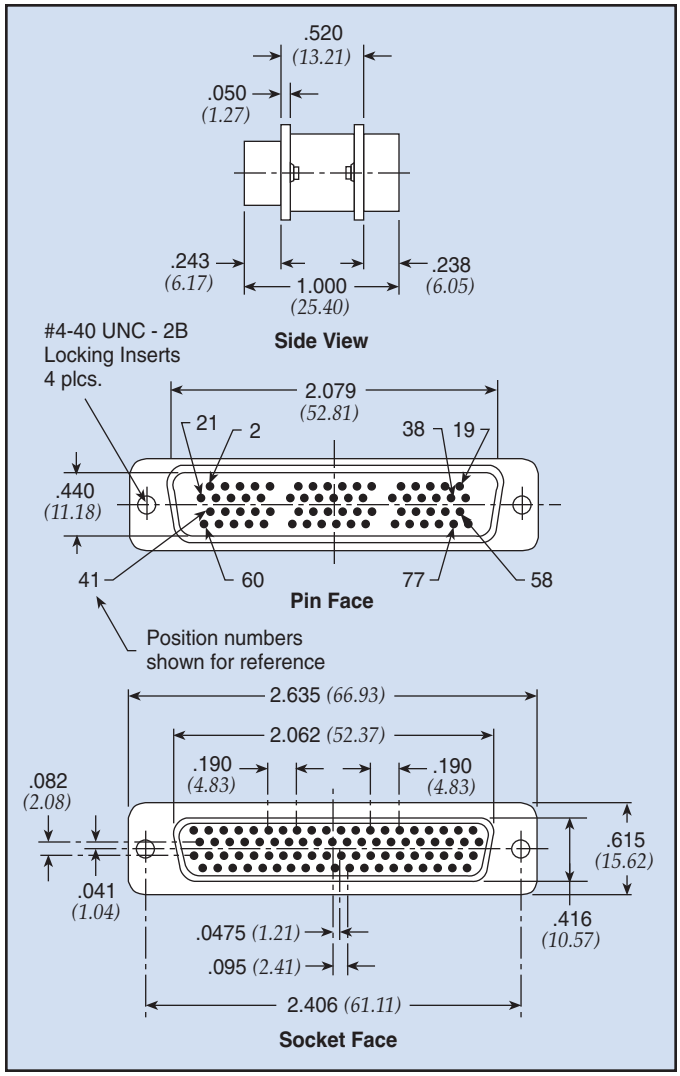

Dimensions in inches *(mm)*

Typical Insertion Loss

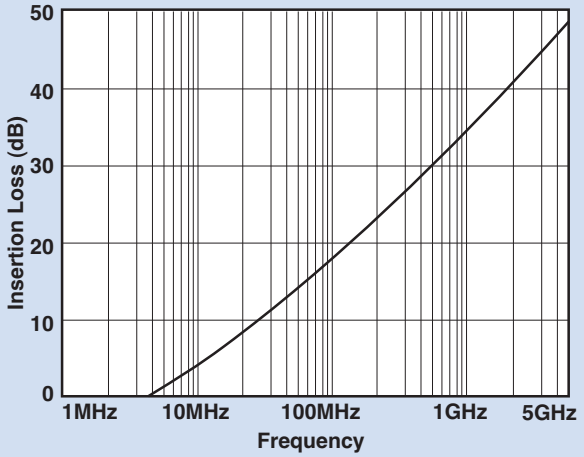

Above curves represent application of proper grounding fundamentals, for assistance consult with API.

Pulse Wave Form* (10 x 1000)

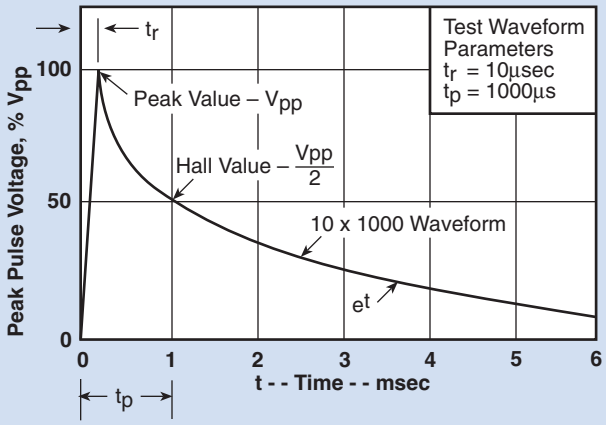

* Reference Bellcore TR-NWT-1089, V_{pp} = 1000V

api technologies corp.
Spectrum Control

Series 700 High Performance Filtered Connectors

Filter Selection

API's Spectrum Control brand of Series 700 connectors offer the highest performance filtering for all types of professional applications.

Features

- Available in 9, 15, 25, 37 and 50 shell sizes
- Variety of termination configurations including right angle and straight PCB for both pin and socket contact and as an adapter
- Capacitive and Pi type filters in a full range of capacitance values

The catalog data for this series is presented in order of shell size, and grouped by pin and socket contacts. Part numbers must be selected from the tables within the series section.

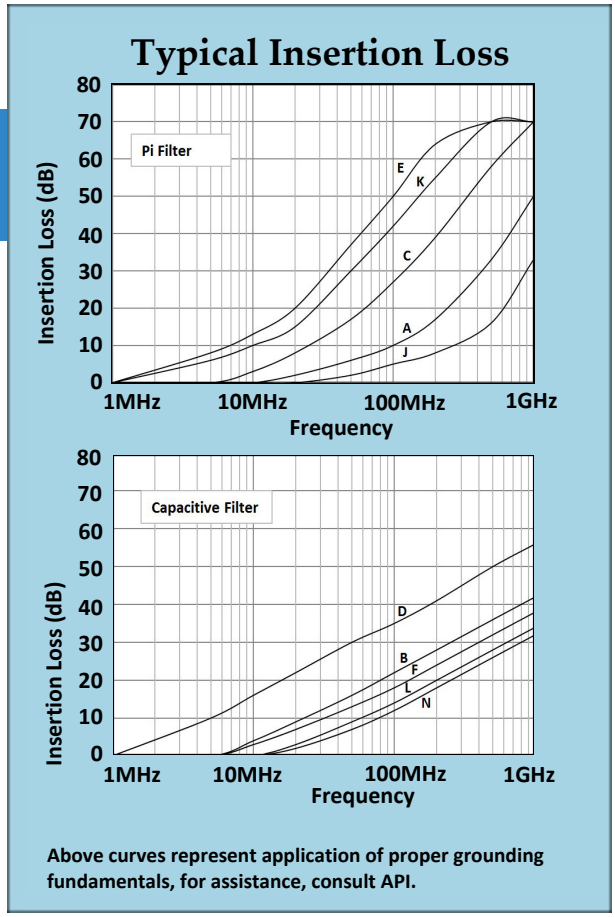

Insertion loss measured per MIL-STD-220, no load, 50ohm source and load.

Electrical Specifications: High Performance Connectors

Filter Designations	Filter Circuits	Capacitance		3 dB Cut-off Frequency Max. (MHz)	Dielectric Withstanding Voltage	Working Voltage DC -55°C to +125°C	Minimum Insertion Loss - Decibels (dB)									
		Value	Tol.				5 MHz	10 MHz	20 MHz	50 MHz	100 MHz	200 MHz	500 MHz	1 GHz		
J	Pi	100 pF	+100 -0%	32	300V	100V	—	—	—	2	5	8	16	33		
A		310 pF	±20%	17	300V	100V	—	—	2	6	10	17	33	50		
C		1000 pF	+150 -0%	3.2	300V	100V	—	3	8	17	27	39	58	70		
K		2500 pF	+100 -0%	1.3	150V	50V	6	10	15	30	42	55	70	70		
E		4000 pF	+100 -0%	0.8	150V	50V	8	13	20	37	50	64	70	70		
N	C	375 pF	±20%	14	600V	200V	—	—	2	7	12	18	26	32		
L		500 pF	±20%	10.6	600V	200V	—	—	3	9	14	20	28	34		
F		830 pF	±20%	6.4	600V	200V	—	3	7	13	18	24	32	38		
B		1000 pF	+100 -0%	3.2	600V	200V	—	4	9	16	22	28	36	42		
D		5000 pF	+100 -0%	0.64	300V	100V	10	16	22	30	35	41	50	56		

Filter designation "G" for grounded contacts, "I" for insulated (not filtered) contacts.
Filter designation "O" for omitted contact and no hole in ground plane.

Above data represents guaranteed minimum.

api technologies corp.
Spectrum Control

Series 700
Specifications and Connector Ordering

Mechanical Specifications

Shell . . . . . Zinc or aluminum diecast, nickel plated 150 µ inches *(3.81 µm)* min.

Insulators. . . . . Glass-filled polyester, flammability UL94V-0

Pin Contacts . . . . . Copper alloy, 15 µ inches *(0.38 µm)* gold plated * over nickel

Socket Contacts . . . . Copper alloy, 30 µ inches *(0.76 µm)* gold plated * over nickel

* *Heavier gold plating available upon request.*
See pg. FC43: Connector Options

Terminations . . . . . Gold flash for PCB mount and solder cups. Solder dipped also available.

Ground Plane. . . . . Brass, solder plated

Grounding Springs . . . . . Beryllium copper

Operating Temperature. . . . . -55°C to +125°C

Capacitors . . . . . Proprietary barium titanate ceramic formulations

Electrical Specifications

Current Rating. . . . . 5 Amps

R.F. Current Rating . . . . . 0.3 Amps

Contact Resistance . . . . . 10 milliohms maximum

UL Recognized . . . . . Under category of communication circuit accessories, File #E149046

Inductance on PI Filters . . . . . ~ 860 nH between 100 kHz and 1 MHz

Solder cups accept up to a 20 gauge wire.

Note:
For additional mechanical, electrical, and environmental specifications, refer to page FC79.

Ordering Your Connector

STEP 1: SELECTING THE FILTER

- Using the insert loss graphs on page FC20 determine which filters provide the required attenuation at the troublesome frequency, while not affecting the signal frequency by more than 3 to 6 dB.
- Choose the filter type, either feed-through capacitor or Pi. The Pi is generally considered better due to its superior high frequency performance and steeper curve. The feed-through capacitor is lower cost.
- Select capacitance value.
- Note the Spectrum letter designation for the filter chosen from the table on page FC20.

STEP 2: SELECTING THE CONNECTOR

- Turn to the appropriate size section. (9, 15, 25, 37, 50)
- Choose either pin contacts (plug) or socket contacts (receptacle).
- Choose the required termination type.
- From the table on the appropriate connector page, using the filter letter designation chosen in step 1 above, select the part number.

STEP 3: SPECIFYING OPTIONS

- Refer to page FC43 for special options including heavy gold plating, 4-40 mounting threads, grounding brackets, hardware, and others.
- Most options are available within the standard lead times.
- Some options require a part number suffix, while other combinations may require factory assistance for part number assignment. If a suffix is shown, add it to your selected part number. If more than one option is needed, consult with factory for part number assignment.

api technologies corp.
Spectrum Control

9 Shell Size Series 700 Pin Contact

Printed Circuit Board Mount

Spectrum Part Number	EMI Filter	
	Filter Designation**	Cap. Value
56-701-001	A	310 pF Pi
56-701-002	B	1000 pF C
56-701-003	C	1000 pF Pi
56-701-004	D	5000 pF C
56-701-005	E	4000 pF Pi
56-701-028	F	830 pF C
56-701-029	J	100 pF Pi
56-701-030	K	2500 pF Pi
56-701-047	N	375 pF C
56-701-086	L	500 pF C

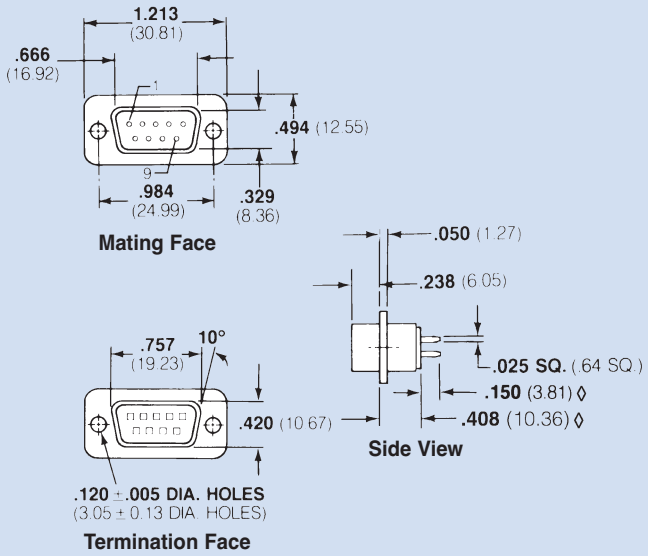

Printed Circuit Board Right Angle Mount

Spectrum Part Number	EMI Filter	
	Filter Designation**	Cap. Value
* 56-702-001	A	310 pF Pi
56-702-002	B	1000 pF C
* 56-702-003	C	1000 pF Pi
56-702-004	D	5000 pF C
* 56-702-005	E	4000 pF Pi
56-702-007	F	830 pF C
56-702-008	J	100 pF Pi
56-702-009	K	2500 pF Pi
56-702-013	N	375 pF C
* 56-702-033	L	500 pF C

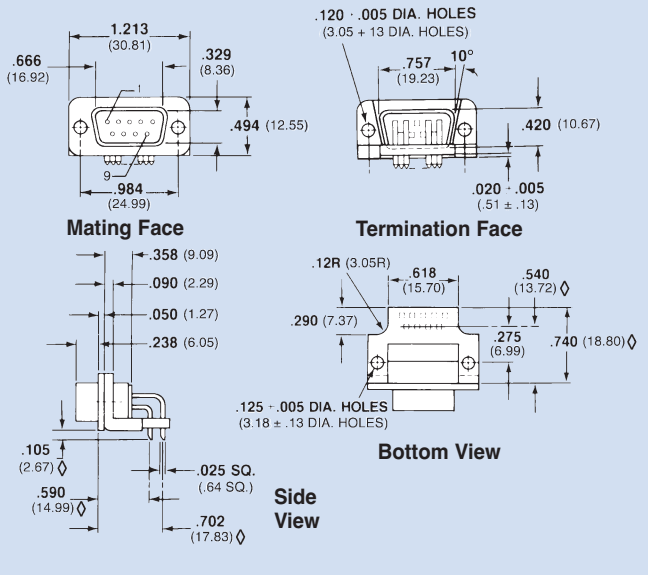

* May be available from distributor stock.
** See page FC20 for filter performance.
Standard Tolerance = ±.005 except where noted, ◊ = ±.015

Dimensions in inches *(mm)*

api technologies corp.
Spectrum Control

9 Shell Size Series 700 Pin Contact

Solderless Wire Wrap

Spectrum Part Number (Select one)	L .500	L .375	L .250	EMI Filter Filter Desig.**	EMI Filter Cap. Value
56-701	-006	-022	-017	A	310 pF Pi
56-701	-007	-023	-018	B	1000 pF C
56-701	-008	-024	-019	C	1000 pF Pi
56-701	-009	-025	-020	D	5000 pF C
56-701	-010	-026	-021	E	4000 pF Pi
56-701	-037	-034	-031	F	830 pF C
56-701	-038	-035	-032	J	100 pF Pi
56-701	-039	-036	-033	K	2500 pF Pi
56-701	-050	-049	-048	N	375 pF C

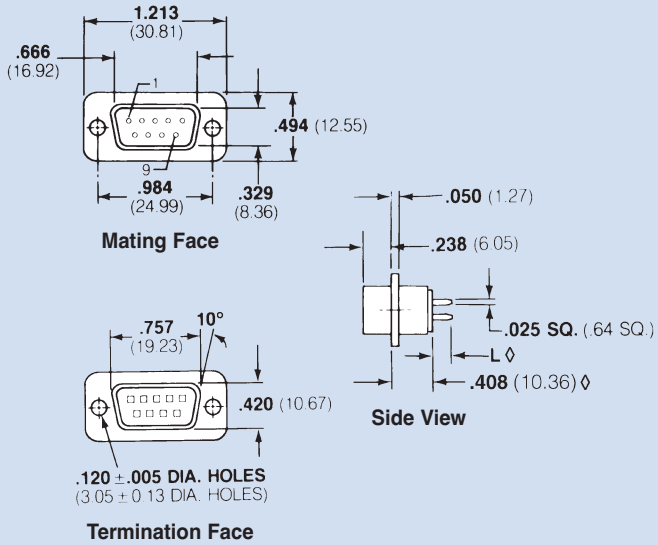

Solder Cup Termination

Spectrum Part Number	EMI Filter Filter Designation**	EMI Filter Cap. Value
* 56-701-011	A	310 pF Pi
* 56-701-012	B	1000 pF C
* 56-701-013	C	1000 pF Pi
* 56-701-014	D	5000 pF C
* 56-701-015	E	4000 pF Pi
* 56-701-040	F	830 pF C
56-701-041	J	100 pF Pi
56-701-042	K	2500 pF Pi
56-701-081	N	375 pF C
56-701-087	L	500 pF C

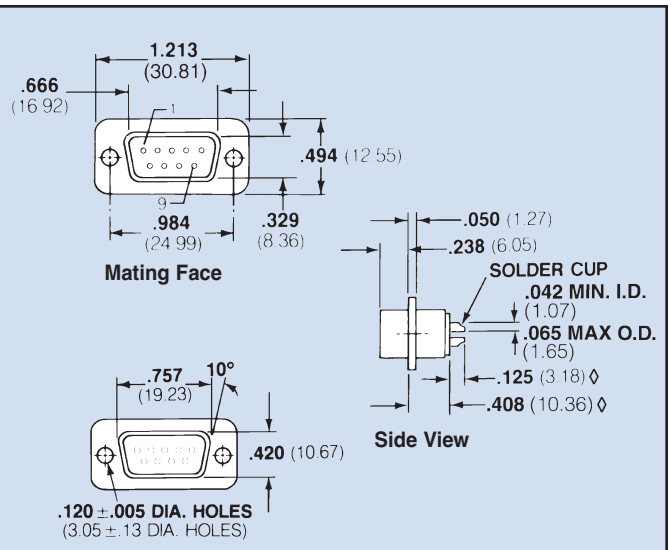

* May be available from distributor stock.
** See page FC20 for filter performance.
Standard Tolerance = ±.005 except where noted, ◊ = ±.015

Dimensions in inches *(mm)*

api technologies corp.
Spectrum Control

9 Shell Size Series 700 Socket Contact

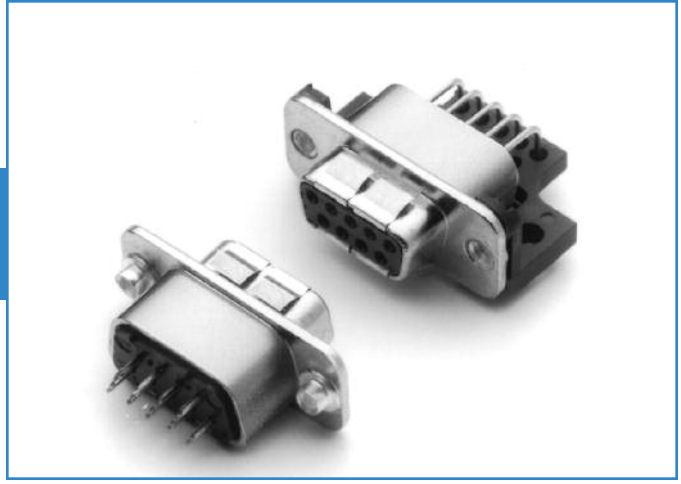

Printed Circuit Board Mount

Spectrum Part Number	EMI Filter	
	Filter Designation**	Cap. Value
56-703-001	A	310 pF Pi
56-703-002	B	1000 pF C
56-703-003	C	1000 pF Pi
56-703-004	D	5000 pF C
56-703-005	E	4000 pF Pi
56-703-022	F	830 pF C
56-703-023	J	100 pF Pi
56-703-024	K	2500 pF Pi
56-703-036	N	375 pF C
56-703-047	L	500 pF C

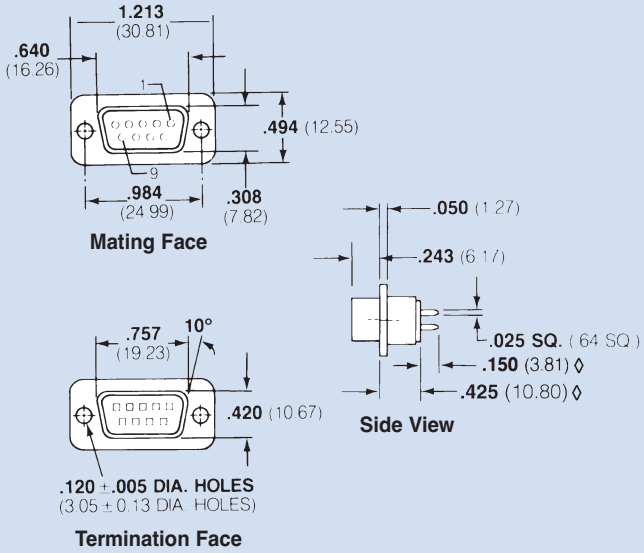

Printed Circuit Board Right Angle Mount

Spectrum Part Number	EMI Filter	
	Filter Designation**	Cap. Value
56-704-001	A	310 pF Pi
56-704-002	B	1000 pF C
* 56-704-003	C	1000 pF Pi
56-704-004	D	5000 pF C
* 56-704-005	E	4000 pF Pi
56-704-007	F	830 pF C
56-704-008	J	100 pF Pi
56-704-009	K	2500 pF Pi
56-704-018	N	375 pF C
56-704-035	L	500 pF C

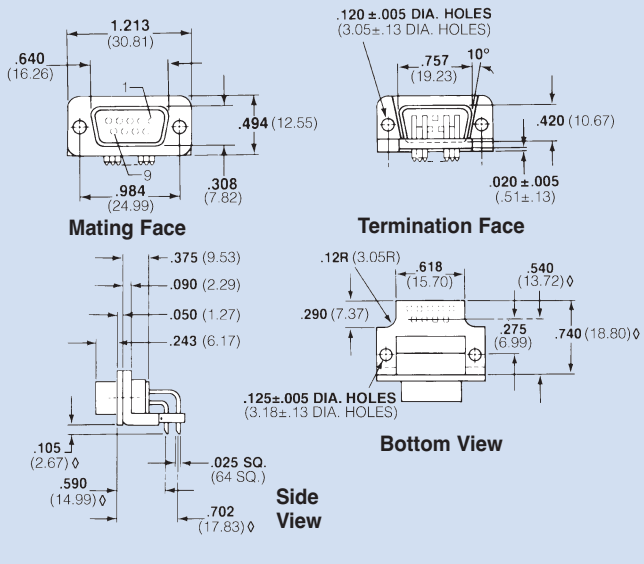

* May be available from distributor stock.
** See page FC20 for filter performance.
Standard Tolerance = ±.005 except where noted, ◊ = ±.015

Dimensions in inches *(mm)*

api technologies corp.
Spectrum Control

9 Shell Size Series 700 Socket Contact & Pin/Socket Adapter

Solderless Wire Wrap

Spectrum Part Number (Select one)	L .500	L .375	L .250	EMI Filter Filter Desig.**	EMI Filter Cap. Value
56-703	-006	-016	-011	A	310 pF Pi
56-703	-007	-017	-012	B	1000 pF C
56-703	-008	-018	-013	C	1000 pF Pi
56-703	-009	-019	-014	D	5000 pF C
* 56-703	-010	-020	* -015	E	4000 pF Pi
56-703	-031	-028	-025	F	830 pF C
56-703	-032	-029	-026	J	100 pF Pi
56-703	-033	-030	-027	K	2500 pF Pi
56-703	-039	-038	-037	N	375 pF C

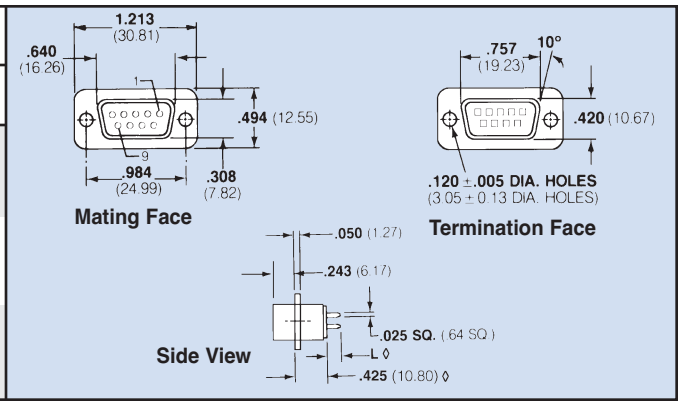

Solder Cup Termination

Spectrum Part Number	EMI Filter Filter Designation**	EMI Filter Cap. Value
* 56-706-001	A	310 pF Pi
56-706-002	B	1000 pF C
* 56-706-003	C	1000 pF Pi
56-706-004	D	5000 pF C
* 56-706-005	E	4000 pF Pi
56-706-006	F	830 pF C
56-706-007	J	100 pF Pi
* 56-706-008	K	2500 pF Pi
56-706-009	N	375 pF C
56-706-017	L	500 pF C

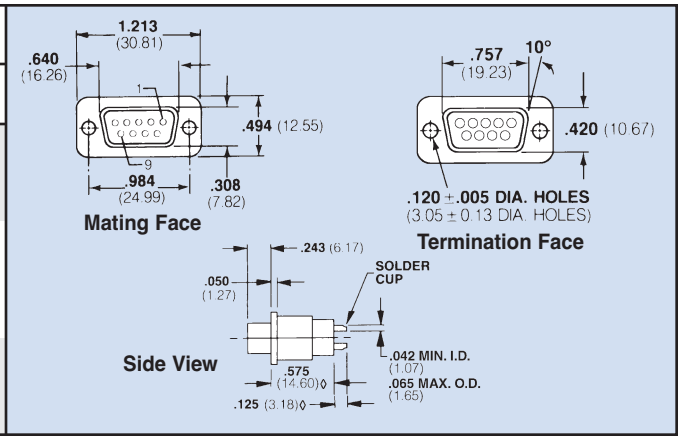

Pin/Socket Adapter

Spectrum Part Number	EMI Filter Filter Designation**	EMI Filter Cap. Value
* 56-705-001	A	310 pF Pi
56-705-002	B	1000 pF C
* 56-705-003 €	C	1000 pF Pi
56-705-004	D	5000 pF C
* 56-705-005 €	E	4000 pF Pi
* 56-705-008	F	830 pF C
56-705-009	J	100 pF Pi
56-705-010	K	2500 pF Pi
56-705-026	N	375 pF C
56-705-049	L	500 pF C

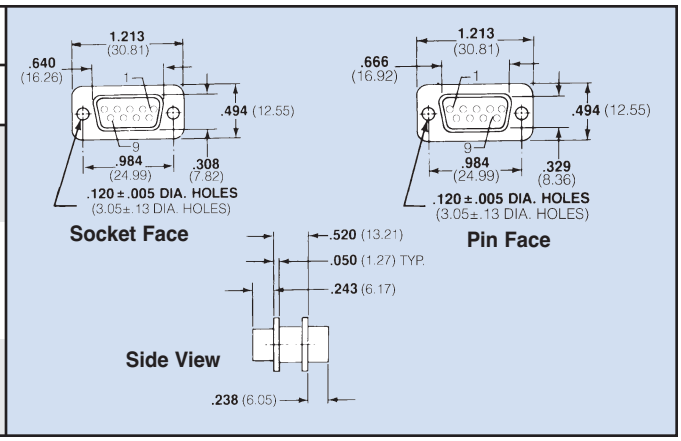

€ Also available through API's authorized European distributors/agents.
* May be available from distributor stock.
** See page FC20 for filter performance.
Standard Tolerance = ±.005 except where noted, ◊ = ±.015

Dimensions in inches *(mm)*

API TECHNOLOGIES • 8061 Avonia Rd. • Fairview, PA 16415 • Ph: 814-474-1571 • Fax: 814-474-3110 • eis.apitech.com
API TECHNOLOGIES' SPECTRUM CONTROL GmbH • Hansastrasse 6 • 91126 Schwabach, Germany • Phone: (49)-9122-795-0 • Fax: (49)-9122-795-58

api technologies corp.
Spectrum Control

15 Shell Size Series 700 Pin Contact

Printed Circuit Board Mount

Spectrum Part Number	EMI Filter	
	Filter Designation**	Cap. Value
56-711-001	A	310 pF Pi
56-711-002	B	1000 pF C
56-711-003	C	1000 pF Pi
56-711-004	D	5000 pF C
56-711-005	E	4000 pF Pi
56-711-028	F	830 pF C
56-711-029	J	100 pF Pi
56-711-030	K	2500 pF Pi
56-711-048	N	375 pF C
56-711-088	L	500 pF C

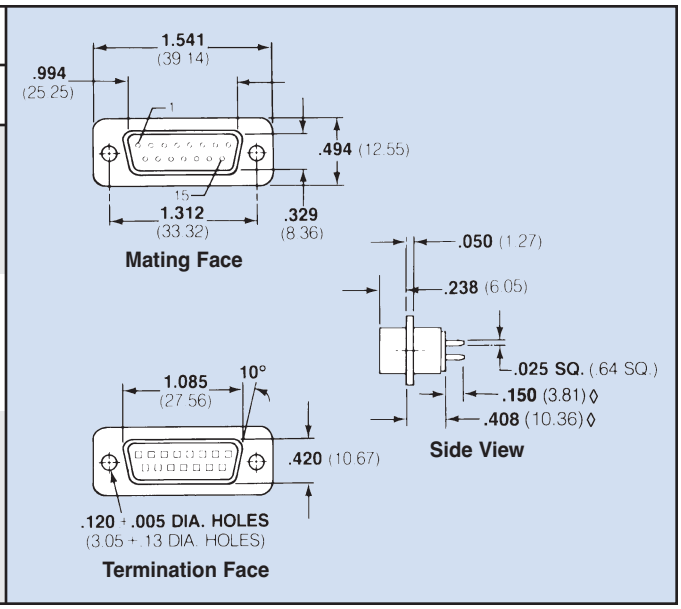

Printed Circuit Board Right Angle Mount

Spectrum Part Number	EMI Filter	
	Filter Designation**	Cap. Value
* 56-712-001	A	310 pF Pi
56-712-002	B	1000 pF C
* 56-712-003	C	1000 pF Pi
56-712-004	D	5000 pF C
* 56-712-005	E	4000 pF Pi
* 56-712-007	F	830 pF C
56-712-008	J	100 pF Pi
56-712-009	K	2500 pF Pi
56-712-017	N	375 pF C
56-712-039	L	500 pF C

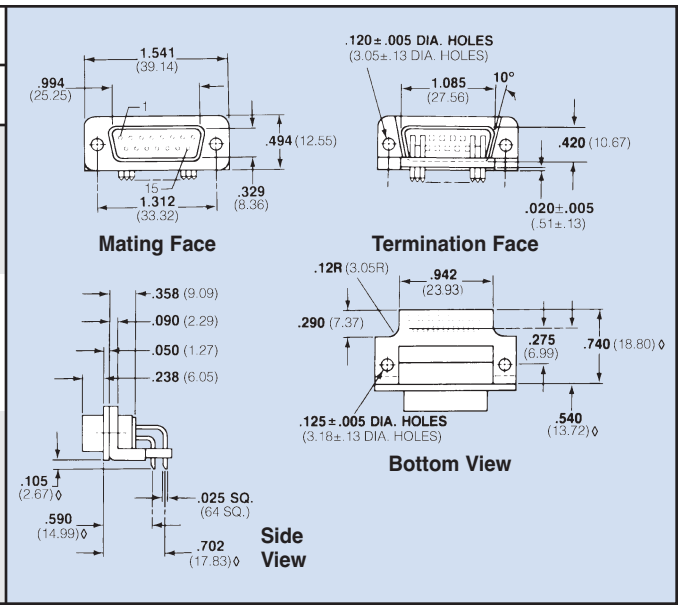

* May be available from distributor stock.
** See page FC20 for filter performance.
Standard Tolerance = ±.005 except where noted, ◊ = ±.015

Dimensions in inches *(mm)*

api technologies corp.
Spectrum Control

15 Shell Size Series 700 Pin Contact

Solderless Wire Wrap

Spectrum Part Number (Select one)	L .500	L .375	L .250	EMI Filter: Filter Desig.**	EMI Filter: Cap. Value
56-711	-006	-023	-018	A	310 pF Pi
56-711	-007	-024	-019	B	1000 pF C
56-711	-008	-025	-020	C	1000 pF Pi
56-711	-009	-026	-021	D	5000 pF C
56-711	-010	-027	-022	E	4000 pF Pi
56-711	-037	-034	-031	F	830 pF C
56-711	-038	-035	-032	J	100 pF Pi
56-711	-039	-036	-033	K	2500 pF Pi
56-711	-051	-050	-049	N	375 pF C

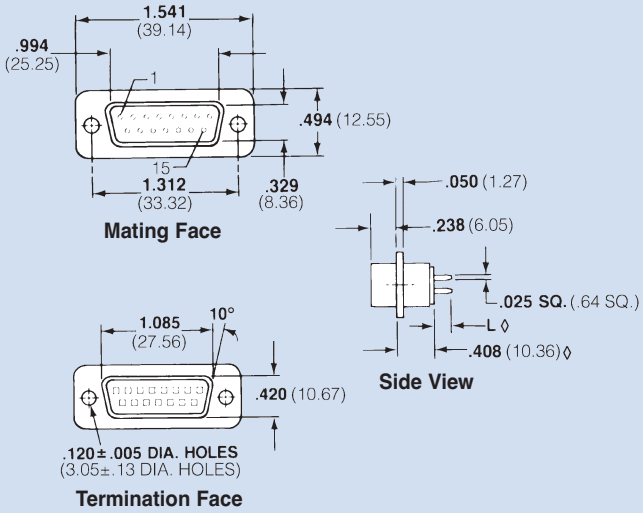

Solder Cup Termination

Spectrum Part Number	EMI Filter: Filter Designation**	EMI Filter: Cap. Value
* 56-711-011	A	310 pF Pi
56-711-012	B	1000 pF C
* 56-711-013	C	1000 pF Pi
56-711-014	D	5000 pF C
* 56-711-015	E	4000 pF Pi
* 56-711-040	F	830 pF C
56-711-041	J	100 pF Pi
56-711-042	K	2500 pF Pi
56-711-085	N	375 pF C
56-711-086	L	500 pF C

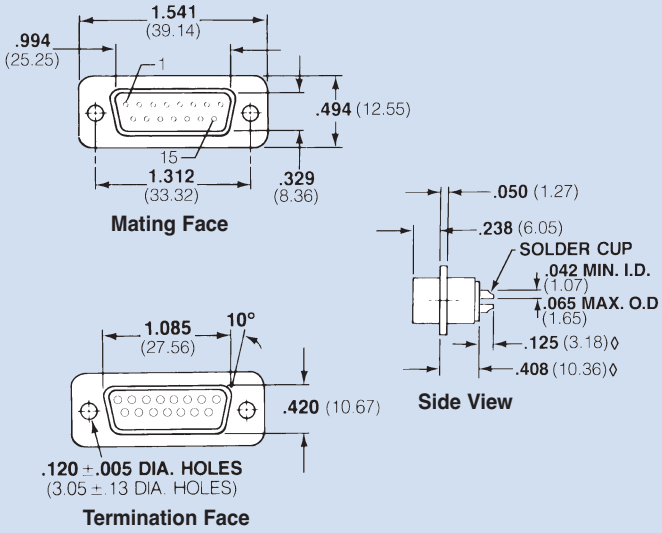

* May be available from distributor stock.
** See page FC20 for filter performance.
Standard Tolerance = ±.005 except where noted, ◊ = ±.015

Dimensions in inches *(mm)*

api technologies corp.
Spectrum Control

15 Shell Size Series 700 Socket Contact

Printed Circuit Board Mount

Spectrum Part Number	EMI Filter	
	Filter Designation**	Cap. Value
56-713-001	A	310 pF Pi
56-713-002	B	1000 pF C
56-713-003	C	1000 pF Pi
56-713-004	D	5000 pF C
56-713-005	E	4000 pF Pi
56-713-021	F	830 pF C
56-713-022	J	100 pF Pi
56-713-023	K	2500 pF Pi
56-713-037	N	375 pF C
56-713-045	L	500 pF C

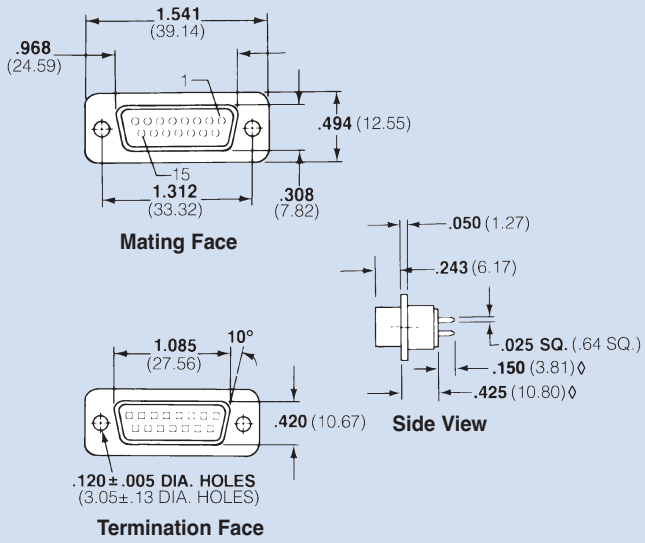

Printed Circuit Board Right Angle Mount

Spectrum Part Number	EMI Filter	
	Filter Designation**	Cap. Value
* 56-714-001	A	310 pF Pi
56-714-002	B	1000 pF C
* 56-714-003	C	1000 pF Pi
56-714-004	D	5000 pF C
* 56-714-005	E	4000 pF Pi
* 56-714-006	F	830 pF C
56-714-007	J	100 pF Pi
56-714-008	K	2500 pF Pi
56-714-017	N	375 pF C
56-714-031	L	500 pF C

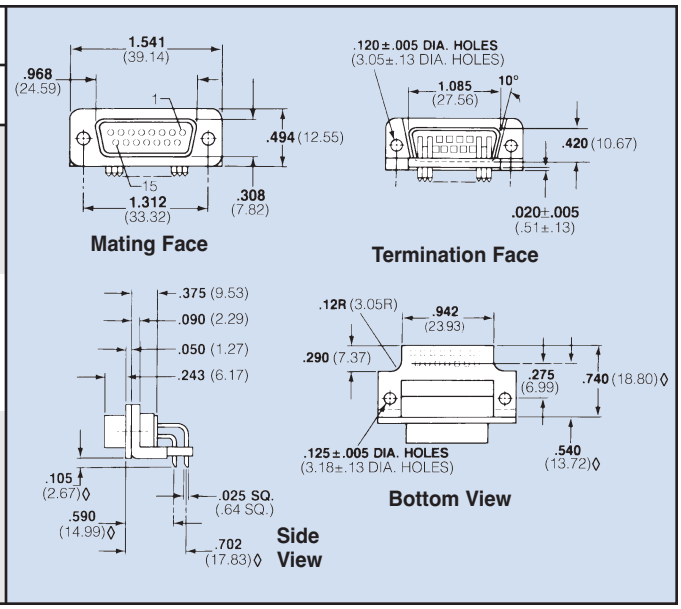

* May be available from distributor stock.
** See page FC20 for filter performance.
Standard Tolerance = ±.005 except where noted, ◊ = ±.015

Dimensions in inches *(mm)*

api technologies corp.
Spectrum Control

15 Shell Size Series 700 Socket Contact & Pin/Socket Adapter

Solderless Wire Wrap

Spectrum Part Number (Select one)	L .500	L .375	L .250	EMI Filter Filter Desig.**	EMI Filter Cap. Value
56-713	-006	-016	-011	A	310 pF Pi
56-713	-007	-017	-012	B	1000 pF C
56-713	-008	-018	-013	C	1000 pF Pi
56-713	-009	-019	-014	D	5000 pF C
56-713	-010	-020	-015	E	4000 pF Pi
56-713	-030	-027	-024	F	830 pF C
56-713	-031	-028	-025	J	100 pF Pi
56-713	-032	-029	-026	K	2500 pF Pi
56-713	-040	-039	-038	N	375 pF C

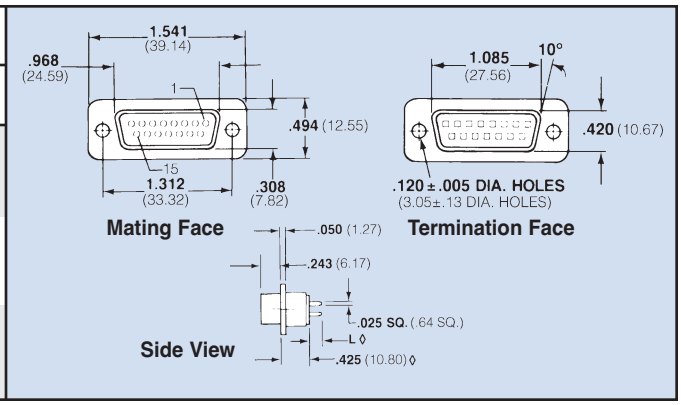

Solder Cup Termination

Spectrum Part Number	EMI Filter Filter Designation**	EMI Filter Cap. Value
* 56-716-001	A	310 pF Pi
56-716-002	B	1000 pF C
* 56-716-003	C	1000 pF Pi
56-716-004	D	5000 pF C
* 56-716-005	E	4000 pF Pi
56-716-006	F	830 pF C
56-716-007	J	100 pF Pi
* 56-716-008	K	2500 pF Pi
56-716-009	N	375 pF C
56-716-013	L	500 pF C

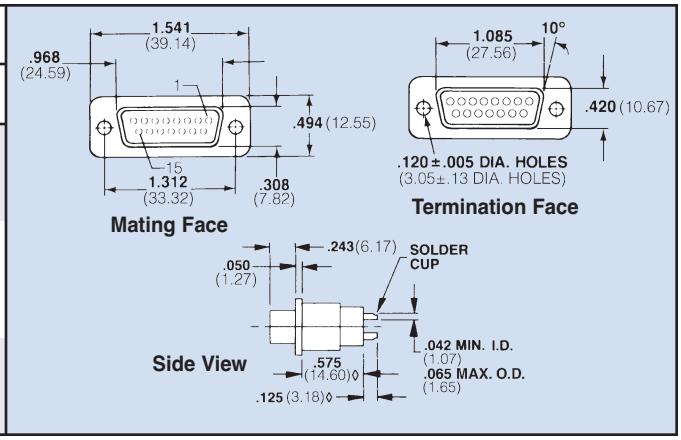

Pin/Socket Adapter

Spectrum Part Number	EMI Filter Filter Designation**	EMI Filter Cap. Value
* 56-715-001	A	310 pF Pi
56-715-002	B	1000 pF C
* 56-715-003 €	C	1000 pF Pi
56-715-004	D	5000 pF C
* 56-715-005 €	E	4000 pF Pi
56-715-007	F	830 pF C
56-715-008	J	100 pF Pi
56-715-009	K	2500 pF Pi
56-715-015	N	375 pF C
56-715-040	L	500 pF C

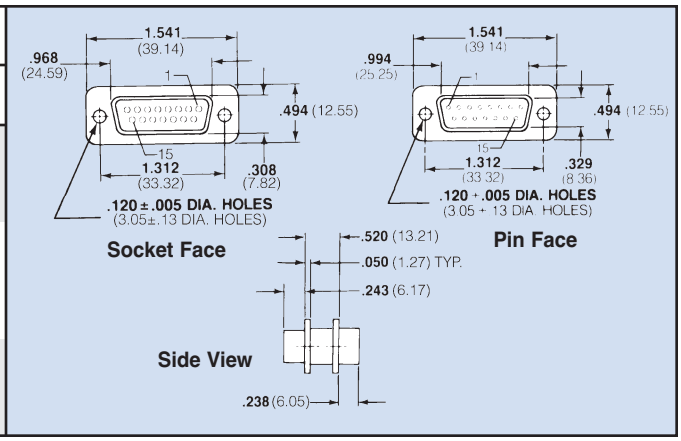

€ Also available through API's authorized European distributors/agents.
* May be available from distributor stock.
** See page FC20 for filter performance.
Standard Tolerance = ±.005 except where noted, ◊ = ±.015

Dimensions in inches *(mm)*

API TECHNOLOGIES • 8061 Avonia Rd. • Fairview, PA 16415 • Ph: 814-474-1571 • Fax: 814-474-3110 • eis.apitech.com
API TECHNOLOGIES' SPECTRUM CONTROL GmbH • Hansastrasse 6 • 91126 Schwabach, Germany • Phone: (49)-9122-795-0 • Fax: (49)-9122-795-58

api technologies corp.
Spectrum Control

25 Series 700 Pin Contact
Shell Size

Printed Circuit Board Mount

Spectrum Part Number	EMI Filter	
	Filter Designation**	Cap. Value
56-721-001	A	310 pF Pi
56-721-002	B	1000 pF C
56-721-003	C	1000 pF Pi
56-721-004	D	5000 pF C
56-721-005	E	4000 pF Pi
56-721-033	F	830 pF C
56-721-034	J	100 pF Pi
56-721-035	K	2500 pF Pi
56-721-063	N	375 pF C
56-721-111	L	500 pF C

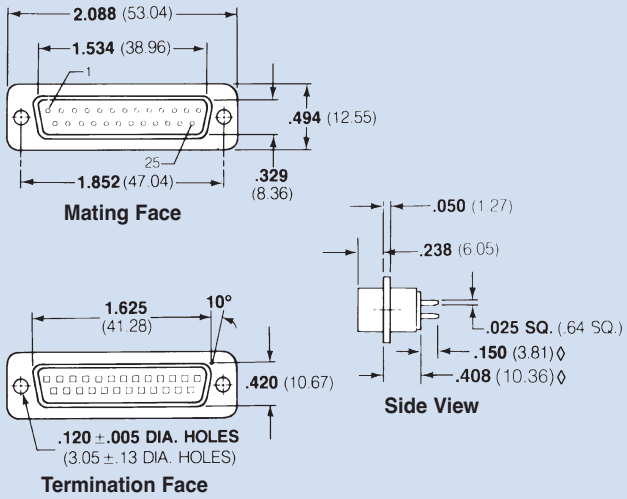

Printed Circuit Board Right Angle Mount

Spectrum Part Number	EMI Filter	
	Filter Designation**	Cap. Value
* 56-722-001	A	310 pF Pi
56-722-002	B	1000 pF C
* 56-722-003	C	1000 pF Pi
56-722-004	D	5000 pF C
* 56-722-005	E	4000 pF Pi
* 56-722-008	F	830 pF C
56-722-009	J	100 pF Pi
56-722-010	K	2500 pF Pi
56-722-027	N	375 pF C
56-722-060	L	500 pF C

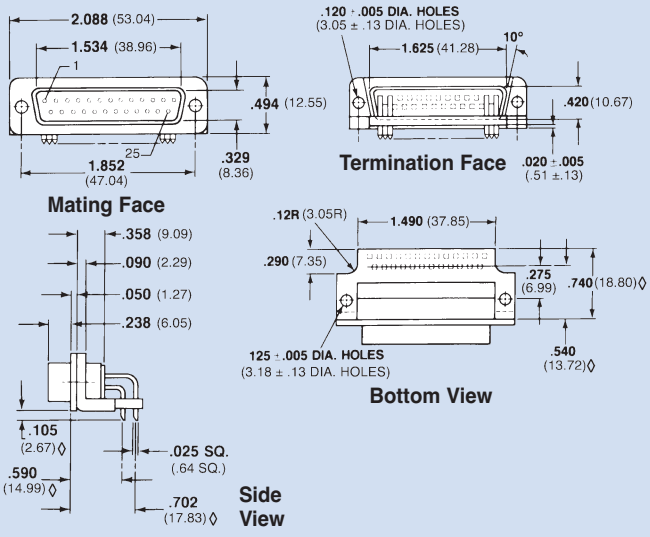

* May be available from distributor stock.
** See page FC20 for filter performance.
Standard Tolerance = ±.005 except where noted, ◊ = ±.015

Dimensions in inches *(mm)*

api technologies corp.
Spectrum Control

25 Series 700 Pin Contact

Shell Size

Solderless Wire Wrap

Spectrum Part Number (Select one)	L .500	L .375	L .250	EMI Filter: Filter Desig.**	EMI Filter: Cap. Value
56-721	-006	-028	-024	A	310 pF Pi
56-721	-007	-029	-025	B	1000 pF C
56-721	-008	-030	-026	C	1000 pF Pi
56-721	-009	-031	-022	D	5000 pF C
56-721	-010	-032	-027	E	4000 pF Pi
56-721	-042	-039	-036	F	830 pF C
56-721	-043	-040	-037	J	100 pF Pi
56-721	-044	-041	-038	K	2500 pF Pi
56-721	-066	-065	-064	N	375 pF C

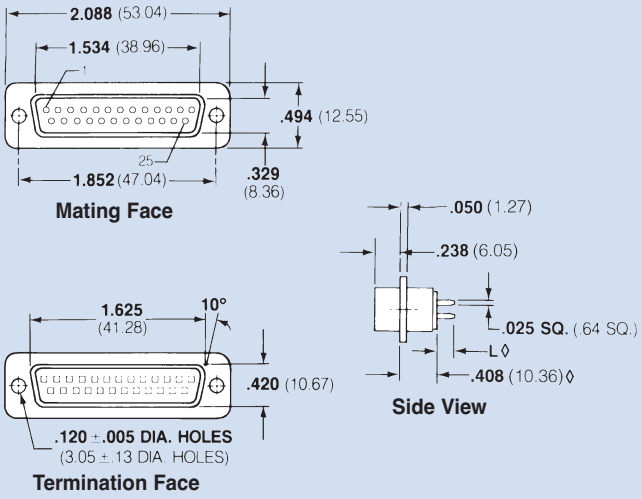

Solder Cup Termination

Spectrum Part Number	EMI Filter: Filter Designation**	EMI Filter: Cap. Value
* 56-721-011	A	310 pF Pi
* 56-721-012	B	1000 pF C
* 56-721-013	C	1000 pF Pi
56-721-014	D	5000 pF C
* 56-721-015	E	4000 pF Pi
* 56-721-045	F	830 pF C
56-721-046	J	100 pF Pi
56-721-047	K	2500 pF Pi
56-721-070	N	375 pF C
56-721-112	L	500 pF C

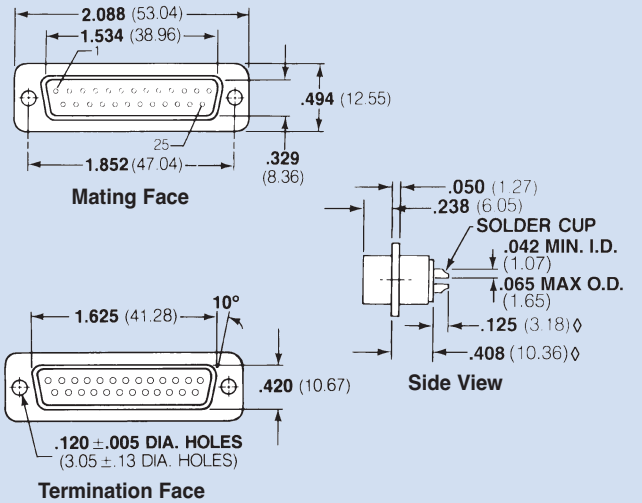

* May be available from distributor stock.
** See page FC20 for filter performance.
Standard Tolerance = ±.005 except where noted, ◊ = ±.015

Dimensions in inches *(mm)*

api technologies corp.
Spectrum Control

25 Shell Size Series 700 Socket Contact

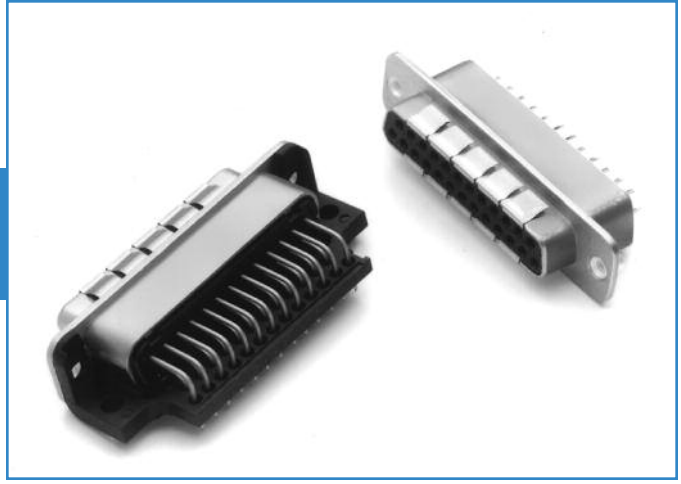

Printed Circuit Board Mount

Spectrum Part Number	EMI Filter	
	Filter Designation**	Cap. Value
56-723-001	A	310 pF Pi
56-723-002	B	1000 pF C
56-723-003	C	1000 pF Pi
56-723-004	D	5000 pF C
56-723-005	E	4000 pF Pi
56-723-023	F	830 pF C
56-723-024	J	100 pF Pi
56-723-025	K	2500 pF Pi
56-723-045	N	375 pF C
56-723-069	L	500 pF C

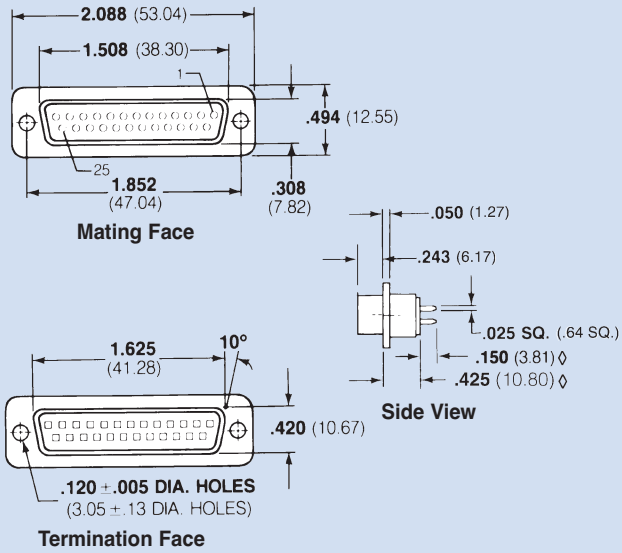

Printed Circuit Board Right Angle Mount

Spectrum Part Number	EMI Filter	
	Filter Designation**	Cap. Value
* 56-724-001	A	310 pF Pi
56-724-002	B	1000 pF C
* 56-724-003	C	1000 pF Pi
56-724-004	D	5000 pF C
* 56-724-005	E	4000 pF Pi
* 56-724-008	F	830 pF C
56-724-009	J	100 pF Pi
56-724-010	K	2500 pF Pi
56-724-021	N	375 pF C
56-724-046	L	500 pF C

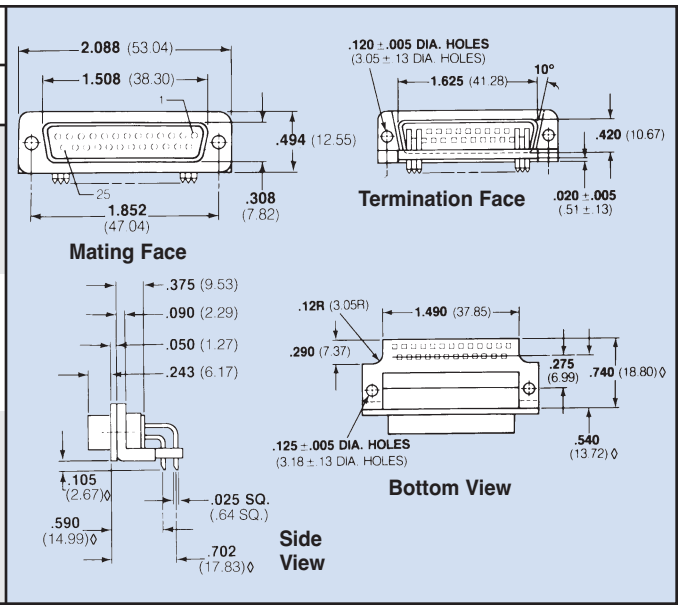

* May be available from distributor stock.
** See page FC20 for filter performance.
Standard Tolerance = ±.005 except where noted, ◊ = ±.015

Dimensions in inches *(mm)*

api technologies corp.
Spectrum Control

25 Shell Size Series 700 Socket Contact & Pin/Socket Adapter

Solderless Wire Wrap

Spectrum Part Number (Select one)	L .500	L .375	L .250	EMI Filter Filter Desig.**	EMI Filter Cap. Value
* 56-723	-006	-017	* -012	A	310 pF Pi
56-723	-007	-018	-013	B	1000 pF C
* 56-723	-008	-019	* -014	C	1000 pF Pi
56-723	-009	-020	-015	D	5000 pF C
* 56-723	-010	-021	* -016	E	4000 pF Pi
* 56-723	-032	-029	* -026	F	830 pF C
56-723	-033	-030	-027	J	100 pF Pi
56-723	-034	-031	-028	K	2500 pF Pi
56-723	-048	-047	-046	N	375 pF C

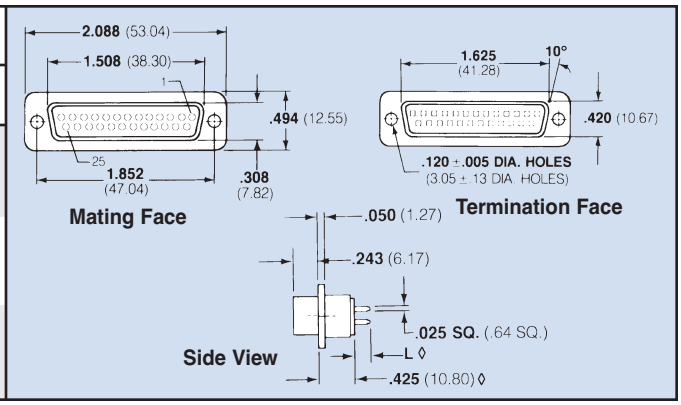

Solder Cup Termination

Spectrum Part Number	EMI Filter Filter Designation**	EMI Filter Cap. Value
* 56-726-001	A	310 pF Pi
56-726-002	B	1000 pF C
* 56-726-003	C	1000 pF Pi
56-726-004	D	5000 pF C
* 56-726-005	E	4000 pF Pi
56-726-006	F	830 pF C
56-726-007	J	100 pF Pi
* 56-726-008	K	2500 pF Pi
56-726-009	N	375 pF C
56-726-021	L	500 pF C

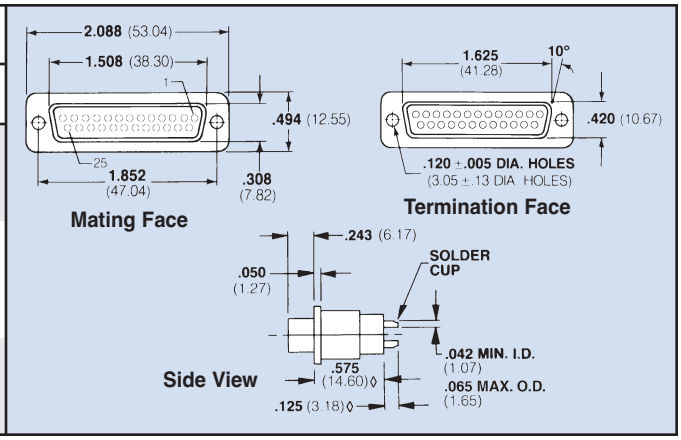

Pin/Socket Adapter

Spectrum Part Number	EMI Filter Filter Designation**	EMI Filter Cap. Value
* 56-725-001	A	310 pF Pi
56-725-002	B	1000 pF C
* 56-725-003 €	C	1000 pF Pi
56-725-004	D	5000 pF C
* 56-725-005 €	E	4000 pF Pi
* 56-725-019	F	830 pF C
56-725-020	J	100 pF Pi
* 56-725-021	K	2500 pF Pi
56-725-064	N	375 pF C
56-725-073	L	500 pF C

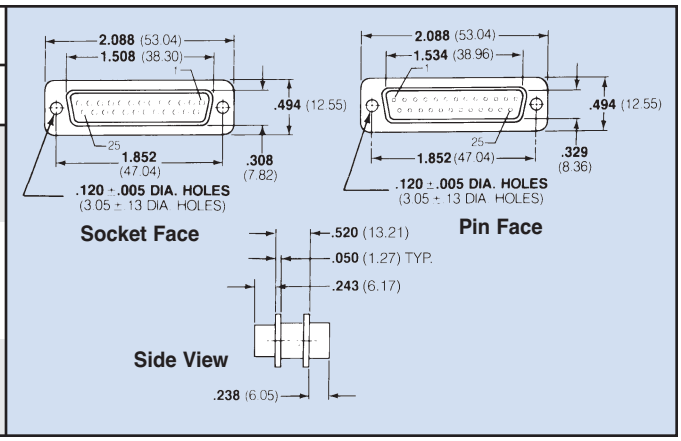

€ Also available through API's authorized European distributors/agents.
* May be available from distributor stock.
** See page FC20 for filter performance.
Standard Tolerance = ±.005 except where noted, ◊ = ±.015

Dimensions in inches *(mm)*

API TECHNOLOGIES • 8061 Avonia Rd. • Fairview, PA 16415 • Ph: 814-474-1571 • Fax: 814-474-3110 • eis.apitech.com
API TECHNOLOGIES' SPECTRUM CONTROL GmbH • Hansastrasse 6 • 91126 Schwabach, Germany • Phone: (49)-9122-795-0 • Fax: (49)-9122-795-58

api technologies corp.
Spectrum Control

37 Shell Size Series 700 Pin Contact

Printed Circuit Board Mount

Spectrum Part Number	EMI Filter	
	Filter Designation**	Cap. Value
56-731-001	A	310 pF Pi
56-731-002	B	1000 pF C
56-731-003	C	1000 pF Pi
56-731-004	D	5000 pF C
56-731-005	E	4000 pF Pi
56-731-028	F	830 pF C
56-731-029	J	100 pF Pi
56-731-030	K	2500 pF Pi
56-731-048	N	375 pF C
56-731-076	L	500 pF C

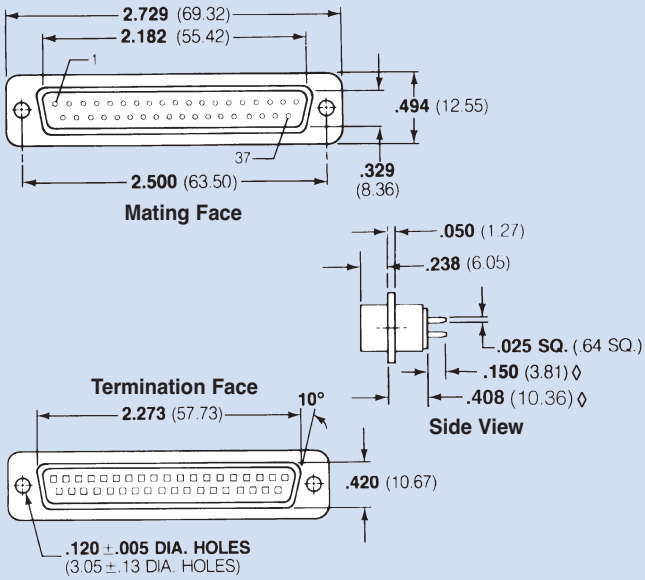

Printed Circuit Board Right Angle Mount

Spectrum Part Number	EMI Filter	
	Filter Designation**	Cap. Value
56-732-001	A	310 pF Pi
56-732-002	B	1000 pF C
* 56-732-003	C	1000 pF Pi
56-732-004	D	5000 pF C
* 56-732-005	E	4000 pF Pi
56-732-006	F	830 pF C
56-732-007	J	100 pF Pi
56-732-008	K	2500 pF Pi
56-732-009	N	375 pF C
56-732-023	L	500 pF C

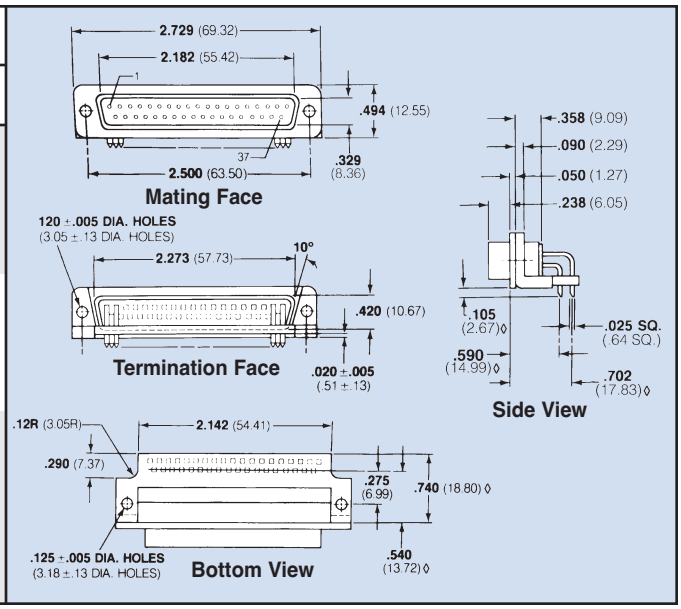

* May be available from distributor stock.
** See page FC20 for filter performance.
Standard Tolerance = ±.005 except where noted, ◊ = ±.015

Dimensions in inches *(mm)*

api technologies corp.
Spectrum Control

37 Shell Size Series 700 Pin Contact

Solderless Wire Wrap

Spectrum Part Number (Select one)	L .500	L .375	L .250	EMI Filter Filter Desig.**	EMI Filter Cap. Value
56-731	-006	-023	-018	A	310 pF Pi
56-731	-007	-024	-019	B	1000 pF C
56-731	-008	-025	-020	C	1000 pF Pi
56-731	-009	-026	-021	D	5000 pF C
56-731	-010	-027	-022	E	4000 pF Pi
56-731	-037	-034	-031	F	830 pF C
56-731	-038	-035	-032	J	100 pF Pi
56-731	-039	-036	-033	K	2500 pF Pi
56-731	-051	-050	-049	N	375 pF C

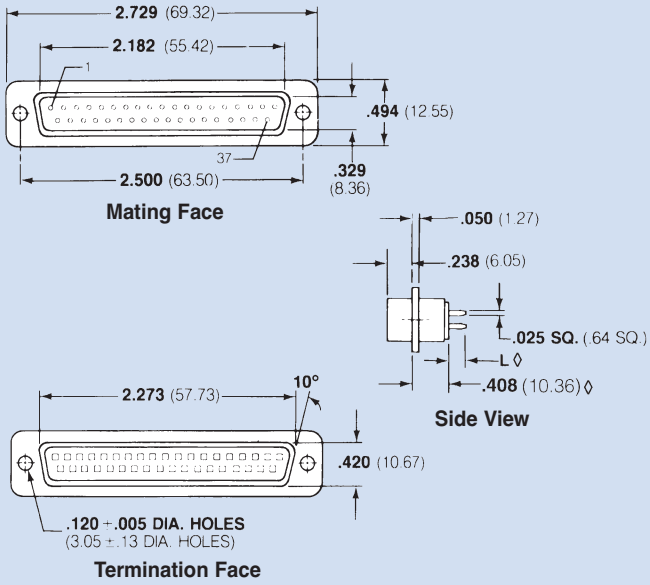

Solder Cup Termination

Spectrum Part Number	EMI Filter Filter Designation**	EMI Filter Cap. Value
* 56-731-011	A	310 pF Pi
56-731-012	B	1000 pF C
* 56-731-013	C	1000 pF Pi
56-731-014	D	5000 pF C
* 56-731-015	E	4000 pF Pi
* 56-731-040	F	830 pF C
56-731-041	J	100 pF Pi
56-731-042	K	2500 pF Pi
56-731-060	N	375 pF C
56-731-077	L	500 pF C

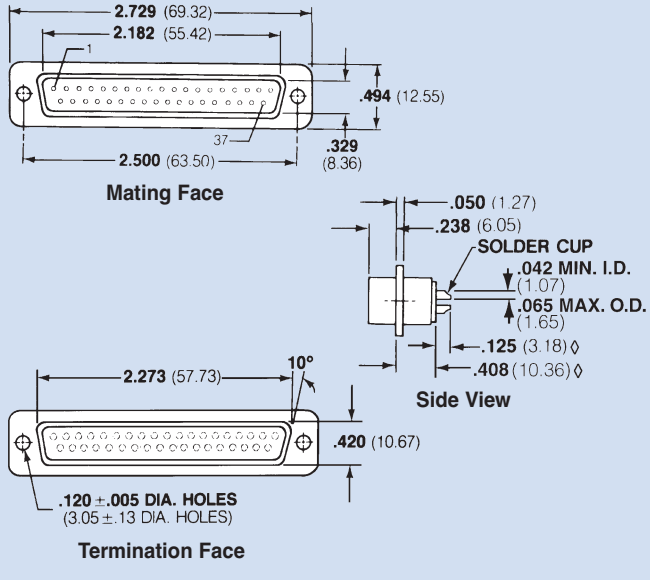

* May be available from distributor stock.
** See page FC20 for filter performance.
Standard Tolerance = ±.005 except where noted, ◊ = ±.015

Dimensions in inches *(mm)*

api technologies corp.
Spectrum Control

37 Series 700 Socket Contact
Shell Size

Printed Circuit Board Mount

Spectrum Part Number	EMI Filter	
	Filter Designation**	Cap. Value
56-733-001	A	310 pF Pi
56-733-002	B	1000 pF C
56-733-003	C	1000 pF Pi
56-733-004	D	5000 pF C
56-733-005	E	4000 pF Pi
56-733-021	F	830 pF C
56-733-022	J	100 pF Pi
56-733-023	K	2500 pF Pi
56-733-035	N	375 pF C
56-733-046	L	500 pF C

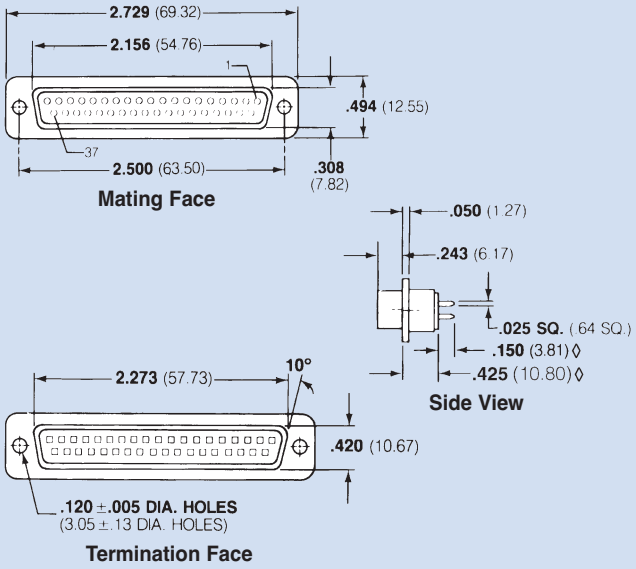

Printed Circuit Board Right Angle Mount

Spectrum Part Number	EMI Filter	
	Filter Designation**	Cap. Value
56-734-001	A	310 pF Pi
56-734-002	B	1000 pF C
56-734-003	C	1000 pF Pi
56-734-004	D	5000 pF C
56-734-005	E	4000 pF Pi
56-734-006	F	830 pF C
56-734-007	J	100 pF Pi
56-734-008	K	2500 pF Pi
56-734-012	N	375 pF C
56-734-021	L	500 pF C

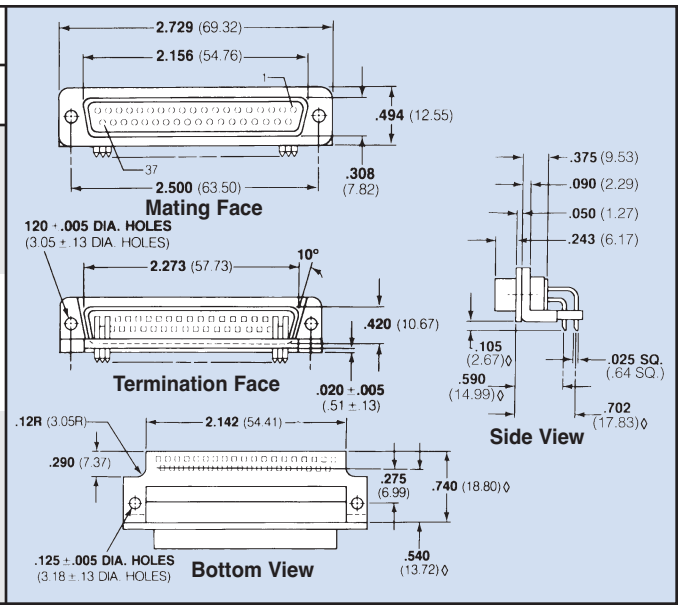

* May be available from distributor stock.
** See page FC20 for filter performance.
Standard Tolerance = ±.005 except where noted, ◊ = ±.015

Dimensions in inches *(mm)*

api technologies corp.
Spectrum Control

37 Shell Size Series 700 Socket Contact & Pin/Socket Adapter

Solderless Wire Wrap

Spectrum Part Number (Select one)	L .500	L .375	L .250	EMI Filter Filter Desig.**	EMI Filter Cap. Value
* 56-733	-006	-016	* -011	A	310 pF Pi
56-733	-007	-017	-012	B	1000 pF C
56-733	-008	-018	-013	C	1000 pF Pi
56-733	-009	-019	-014	D	5000 pF C
56-733	-010	-020	-015	E	4000 pF Pi
56-733	-030	-027	-024	F	830 pF C
56-733	-031	-028	-025	J	100 pF Pi
56-733	-032	-029	-026	K	2500 pF Pi
56-733	-038	-037	-036	N	375 pF C

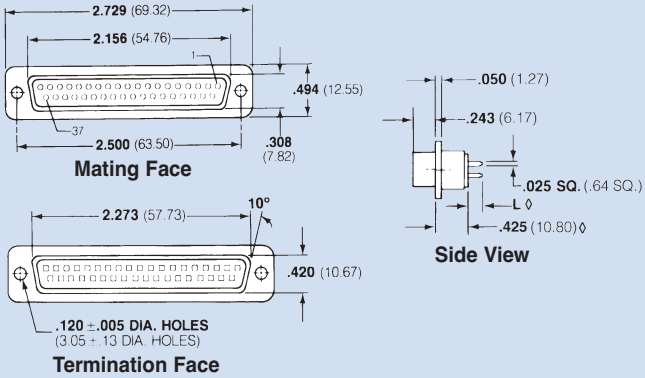

Solder Cup Termination

Spectrum Part Number	EMI Filter Filter Designation**	EMI Filter Cap. Value
* 56-736-001	A	310 pF Pi
56-736-002	B	1000 pF C
* 56-736-003	C	1000 pF Pi
56-736-004	D	5000 pF C
* 56-736-005	E	4000 pF Pi
56-736-006	F	830 pF C
56-736-007	J	100 pF Pi
* 56-736-008	K	2500 pF Pi
56-736-009	N	375 pF C
56-736-015	L	500 pF C

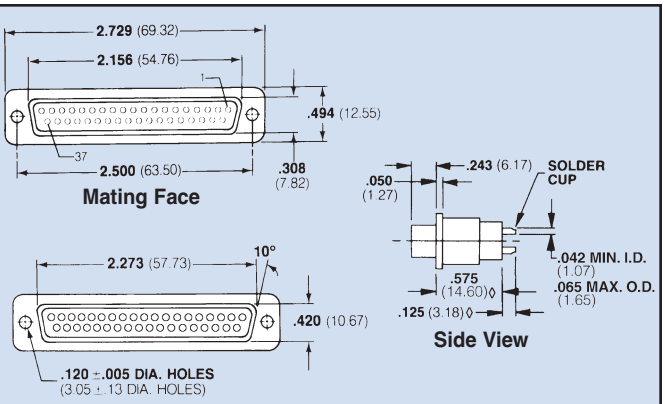

Pin/Socket Adapter

Spectrum Part Number	EMI Filter Filter Designation**	EMI Filter Cap. Value
* 56-735-001	A	310 pF Pi
56-735-002	B	1000 pF C
* 56-735-003 €	C	1000 pF Pi
56-735-004	D	5000 pF C
* 56-735-005 €	E	4000 pF Pi
* 56-735-008	F	830 pF C
56-735-009	J	100 pF Pi
56-735-010	K	2500 pF Pi
56-735-025	N	375 pF C
56-735-034	L	500 pF C

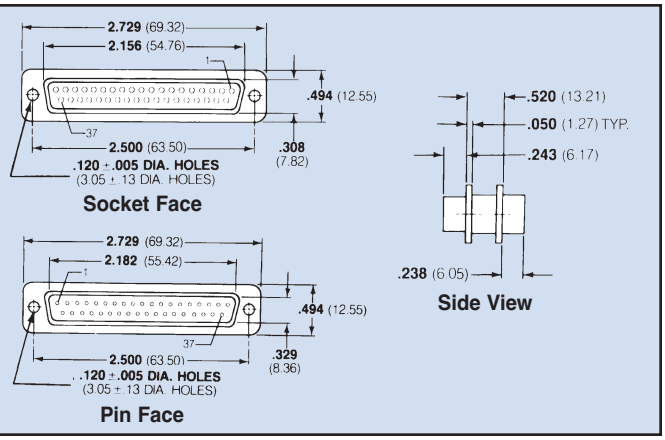

€ Also available through API's authorized European distributors/agents.
* May be available from distributor stock.
** See page FC20 for filter performance.
Standard Tolerance = ±.005 except where noted, ◊ = ±.015

Dimensions in inches *(mm)*

API TECHNOLOGIES • 8061 Avonia Rd. • Fairview, PA 16415 • Ph: 814-474-1571 • Fax: 814-474-3110 • eis.apitech.com
API TECHNOLOGIES' SPECTRUM CONTROL GmbH • Hansastrasse 6 • 91126 Schwabach, Germany • Phone: (49)-9122-795-0 • Fax: (49)-9122-795-58

api technologies corp.
Spectrum Control

50 Shell Size Series 700 Pin Contact

Printed Circuit Board Mount

Spectrum Part Number	EMI Filter	
	Filter Designation**	Cap. Value
56-741-001	A	310 pF Pi
56-741-002	B	1000 pF C
56-741-003	C	1000 pF Pi
56-741-004	D	5000 pF C
56-741-005	E	4000 pF Pi
56-741-027	F	830 pF C
56-741-028	J	100 pF Pi
56-741-029	K	2500 pF Pi
56-741-042	N	375 pF C
56-741-066	L	500 pF C

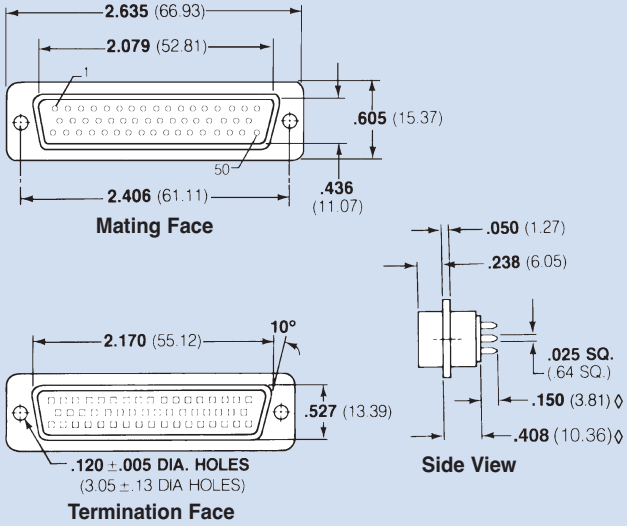

Printed Circuit Board Right Angle Mount

Spectrum Part Number	EMI Filter	
	Filter Designation**	Cap. Value
56-742-001	A	310 pF Pi
56-742-002	B	1000 pF C
56-742-003	C	1000 pF Pi
56-742-004	D	5000 pF C
56-742-005	E	4000 pF Pi
56-742-006	F	830 pF C
56-742-007	J	100 pF Pi
56-742-008	K	2500 pF Pi
56-742-009	N	375 pF C
56-742-022	L	500 pF C

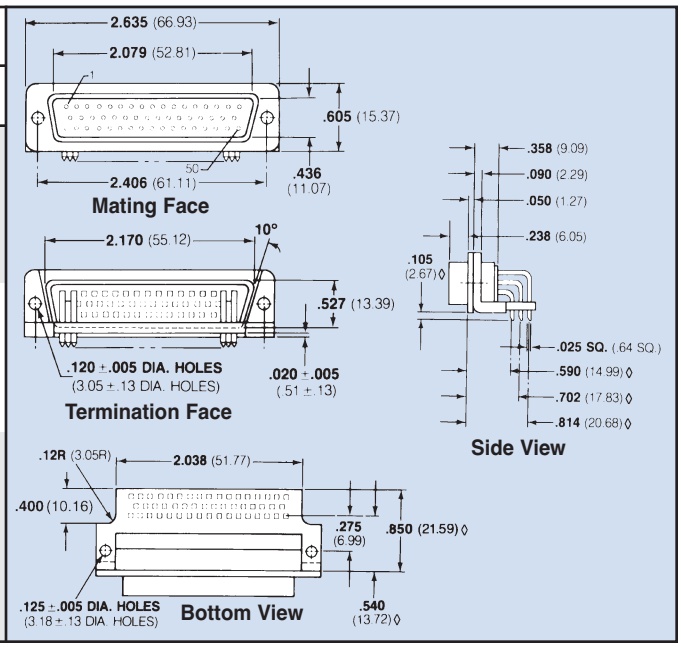

* May be available from distributor stock.
** See page FC20 for filter performance.
Standard Tolerance = ±.005 except where noted, ◊ = ±.015

Dimensions in inches *(mm)*

api technologies corp.
Spectrum Control

50 Series 700 Pin Contact
Shell Size

Solderless Wire Wrap

Spectrum Part Number (Select one)	L .500	L .375	L .250	EMI Filter: Filter Desig.**	EMI Filter: Cap. Value
56-741	-006	-022	-017	A	310 pF Pi
56-741	-007	-023	-018	B	1000 pF C
56-741	-008	-024	-019	C	1000 pF Pi
56-741	-009	-025	-020	D	5000 pF C
56-741	-010	-026	-021	E	4000 pF Pi
56-741	-036	-033	-030	F	830 pF C
56-741	-037	-034	-031	J	100 pF Pi
56-741	-038	-035	-032	K	2500 pF Pi
56-741	-045	-044	-043	N	375 pF C

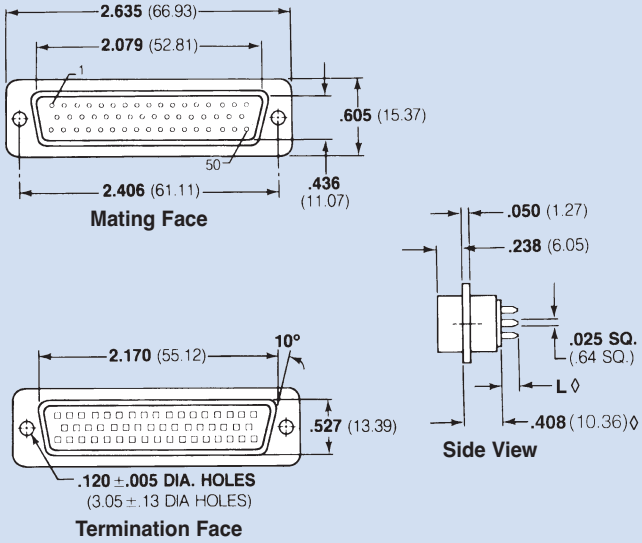

Solder Cup Termination

Spectrum Part Number	EMI Filter: Filter Designation**	EMI Filter: Cap. Value
* 56-741-011	A	310 pF Pi
* 56-741-012	B	1000 pF C
* 56-741-013	C	1000 pF Pi
* 56-741-014	D	5000 pF C
* 56-741-015	E	4000 pF Pi
56-741-039	F	830 pF C
56-741-040	J	100 pF Pi
56-741-041	K	2500 pF Pi
56-741-063	N	375 pF C
56-741-067	L	500 pF C

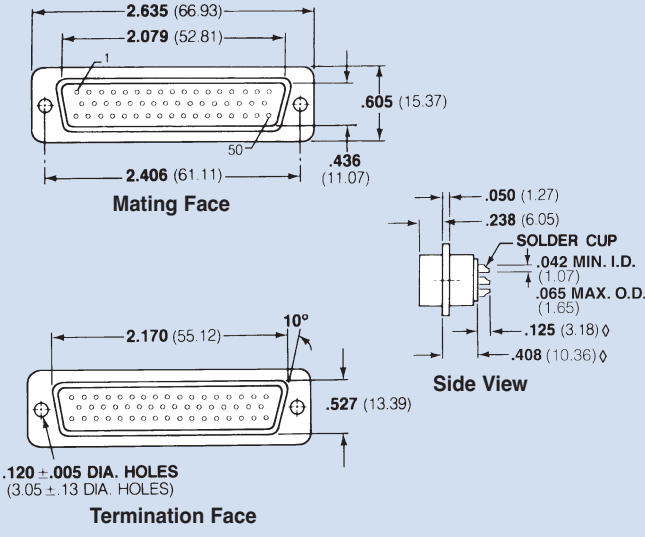

* May be available from distributor stock.
** See page FC20 for filter performance.
Standard Tolerance = ±.005 except where noted, ◊ = ±.015

Dimensions in inches *(mm)*

api technologies corp.
Spectrum Control

50 Shell Size Series 700 Socket Contact

Printed Circuit Board Mount

Spectrum Part Number	EMI Filter	
	Filter Designation**	Cap. Value
56-743-001	A	310 pF Pi
56-743-002	B	1000 pF C
56-743-003	C	1000 pF Pi
56-743-004	D	5000 pF C
56-743-005	E	4000 pF Pi
56-743-021	F	830 pF C
56-743-022	J	100 pF Pi
56-743-023	K	2500 pF Pi
56-743-033	N	375 pF C
56-743-043	L	500 pF C

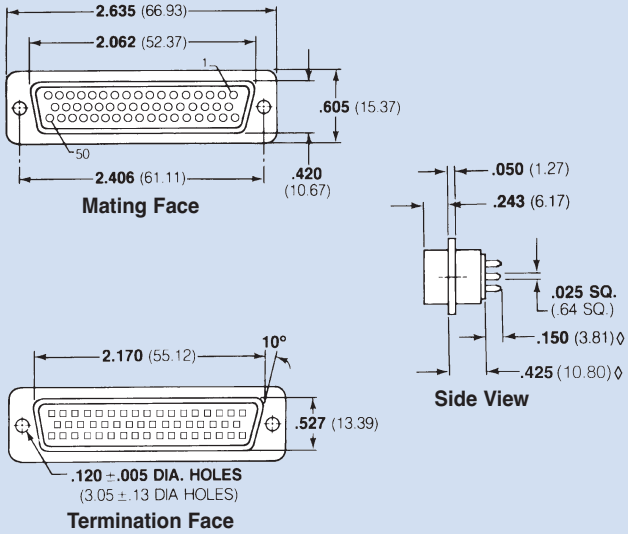

Printed Circuit Board Right Angle Mount

Spectrum Part Number	EMI Filter	
	Filter Designation**	Cap. Value
56-744-001	A	310 pF Pi
56-744-002	B	1000 pF C
56-744-003	C	1000 pF Pi
56-744-004	D	5000 pF C
56-744-005	E	4000 pF Pi
56-744-006	F	830 pF C
56-744-007	J	100 pF Pi
56-744-008	K	2500 pF Pi
56-744-009	N	375 pF C
56-744-012	L	500 pF C

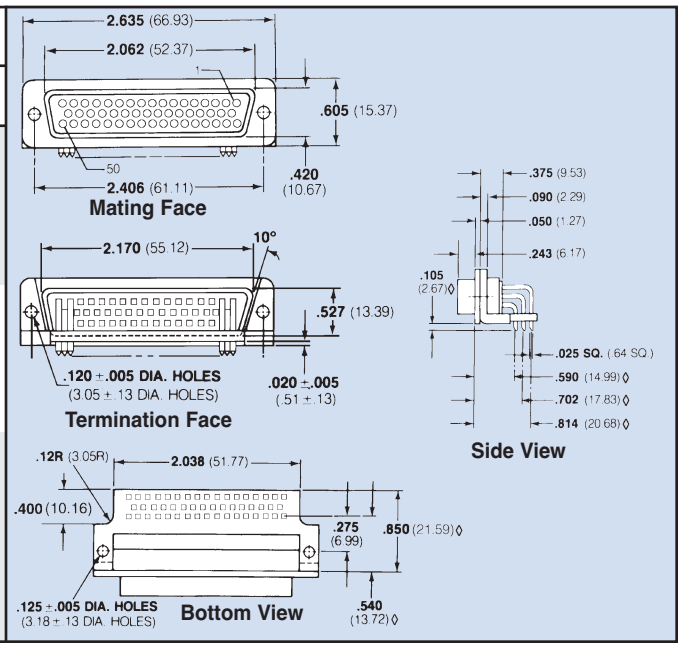

* May be available from distributor stock.
** See page FC20 for filter performance.
Standard Tolerance = ±.005 except where noted, ◊ = ±.015

Dimensions in inches *(mm)*

api technologies corp.
Spectrum Control

50 Shell Size Series 700 Socket Contact & Pin/Socket Adapter

Solderless Wire Wrap

Spectrum Part Number (Select one)	L .500	L .375	L .250	EMI Filter: Filter Desig.**	EMI Filter: Cap. Value
56-743	-006	-016	-011	A	310 pF Pi
56-743	-007	-017	-012	B	1000 pF C
56-743	-008	-018	-013	C	1000 pF Pi
56-743	-009	-019	-014	D	5000 pF C
56-743	-010	-020	-015	E	4000 pF Pi
56-743	-030	-027	-024	F	830 pF C
56-743	-031	-028	-025	J	100 pF Pi
56-743	-032	-029	-026	K	2500 pF Pi
56-743	-036	-035	-034	N	375 pF C

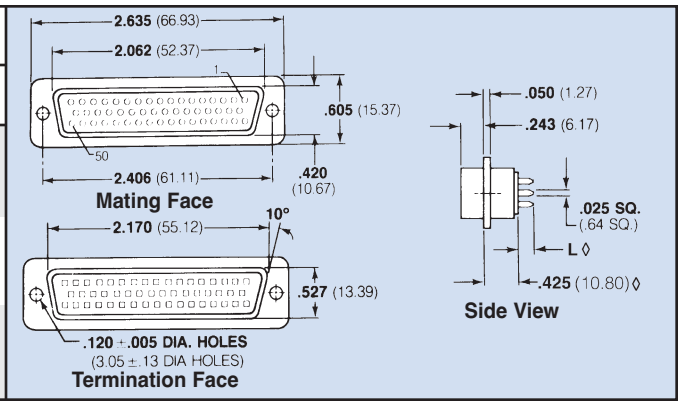

Solder Cup Termination

Spectrum Part Number	EMI Filter: Filter Designation**	EMI Filter: Cap. Value
56-746-001	A	310 pF Pi
56-746-002	B	1000 pF C
56-746-003	C	1000 pF Pi
56-746-004	D	5000 pF C
56-746-005	E	4000 pF Pi
56-746-006	F	830 pF C
56-746-007	J	100 pF Pi
56-746-008	K	2500 pF Pi
56-746-009	N	375 pF C
56-746-018	L	500 pF C

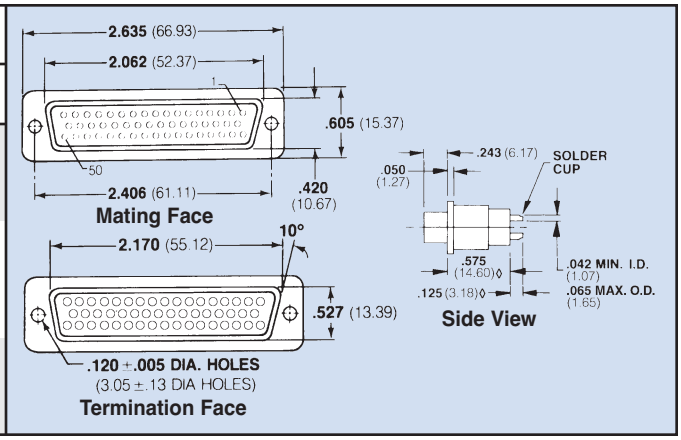

Pin/Socket Adapter

Spectrum Part Number	EMI Filter: Filter Designation**	EMI Filter: Cap. Value
* 56-745-001	A	310 pF Pi
56-745-002	B	1000 pF C
* 56-745-003	C	1000 pF Pi
56-745-004	D	5000 pF C
* 56-745-005	E	4000 pF Pi
56-745-006	F	830 pF C
56-745-007	J	100 pF Pi
56-745-008	K	2500 pF Pi
56-745-019	N	375 pF C
56-745-027	L	500 pF C

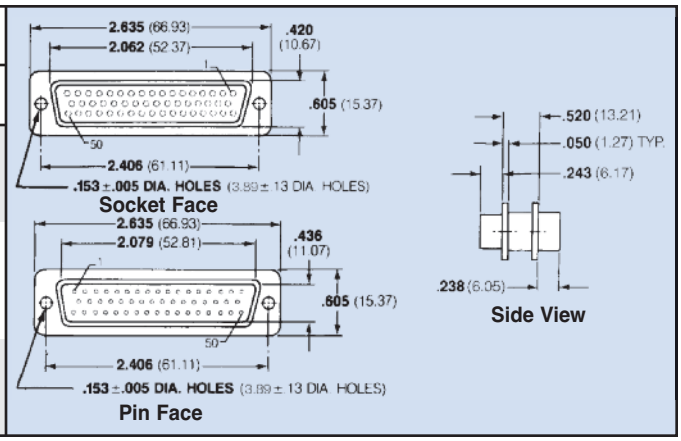

* May be available from distributor stock.
** See page FC20 for filter performance.
Standard Tolerance = ±.005 except where noted, ◊ = ±.015

Dimensions in inches *(mm)*

api technologies corp.
Spectrum Control

D-Subminiature Part Numbering System

Ordering Information

Example: **56-513-012-TI**

56 - 5 1 3 - 0 12 - TI

Filtered D-Subminiature Connectors

- Standard connector
F - RoHS compliant version

Product Series

4 = **Series F Ferrite**
5 = **Series 500 Low Profile**
6 = **Series 600 Hi-Density**
7 = **Series 700 High Performance**

Shell Size

Series 400 & Series 500
0 = 9 Contacts
1 = 15 Contacts
2 = 25 Contacts
3 = 37 Contacts

Series 600 Hi-Density
0 = 15 Contacts
1 = 26 Contacts
2 = 44 Contacts
3 = 62 Contacts
4 = 78 Contacts

Series 700
0 = 9 Contacts
1 = 15 Contacts
2 = 25 Contacts
3 = 37 Contacts
4 = 50 Contacts

Contact Type/Termination

1 = Pin to solder cup
2 = Pin to 90° PCB mount
3 = Socket to straight PCB mount
4 = Socket to 90° PCB mount
5 = Pin-socket adapter
6 = Socket to solder cup
7 = Pin to straight PCB mount

Styles available for:
Series 400 only 2, 3, 4, 7
Series 500 only 2, 3, 4 & 7
Series 600 only 1, 2, 3, 4, 5
Series 700 1 thru 7

Note: 1 can be Pin to solder cup or Pin to PCB for Series 700. See charts pages FC22-FC41.

Line Filtering

0 = All positions same
9 = Special loading (Series 600 only)

Capacitance Value

Series 400
01 = Always

Series 500
10 = 120 pF
11 = 440 pF
12 = 840 pF
13 = 1000 pF
14 = 1500 pF

Series 600
15 = 85 pF FT
16 = 180 pF FT
18 = 1000 pF FT
19 = 4000 pF FT
20 = Insulated contact

Series 700
See filter specification chart on page FC20 and select part numbers from Series 700 charts pages FC22-FC41.

Options

See options descriptions on page FC43 add suffix ending

Series F
HD = Hi-Density (15 socket only)

Series 500
TI = 4-40 threads on mounting flange (.125" hole if not selected)
GBL = Grounded board lock includes 4-40 threads (available only on 90° PCB)
GBLF = Grounded board lock and ferrite slab provides enhanced LC performance. (Available only on 90° PCB)

Series 600 Hi-Density
LI = 4-40 UNC inserts
S = Solder dipped tails/Solder Cups*
50G = 50 µ *(1.27 µm)* gold
GBL = Ground board lock

Series 700
LI = 4-40 UNC inserts
LIM = Metric M3.0 self-locking threads
GB = Metal bracket provides ground connection, includes 4-40 self-locking threads (for right angle mount only)
GBL = Grounded board lock (right angle)
GBL6 = for .062" boards (straight PCB mount) (1.57mm)
GBL9 = for .093" boards (straight PCB mount (2.36mm)
50G = 50 µ *(1.27 µm)* gold plating
S = Solder dipped tails/Solder Cups*
JS = Jackscrew mounting

For option combinations, consult factory.

***Dipped Solder Cup**
- No socket to solder cup product
- Solder cups may be full of solder
- Standard part: Sn60 or equivalent
- RoHS Part: Sn96 or equivalent

To assist your efforts in selecting the correct Filtered Connector to meet your needs, we have developed a part numbering system. All of the standard products are shown in their respective catalog pages.

*Part number **56-513-012-TI** represents a Series 500 connector with 15 contacts in a socket to straight PCB mount configuration. All connector positions have a capacitance value of 840 pF and there are 4-40 threads on mounting flange.*

api technologies corp.
Spectrum Control

D-Subminiature Connector Options

Threaded Inserts

Available on Series 500, 600 & 700

- #4-40 UNC or metric M3.0 threaded inserts in mounting flanges
- Allows ease of panel-assembly
- Plated steel inserts with last thread upset for torque

Grounding Bracket

For right angle mount PCB connectors, available on Series 700

- Metal bracket in place of plastic
- Provides ground connection direct from circuit board
- Allows shell grounding to board
- Includes 4-40 threads

Stand-off with Board Lock Feature

For straight PCB connectors, available on Series 700

- Allows shell grounding to board
- Eliminates stress on filter terminations
- Tin plated brass stand-off with snap-in feature
- Available for .062" (1.57mm) or .093" (2.36mm) thick boards

Grounding Bracket with Board Lock

For right angle mount PCB connectors, available on Series 500 & 700

- Metal bracket provides grounding
- Snap-in, no hardware needed, 4-40 threads included
- For use on .062" (1.57mm) thick boards

Gold Plating

Available on Series 600 & 700

- High reliability applications, 50µ" (1.27 µm) gold over 50µ" (1.27 µm) nickel

Solder Dipped Tails

Available on Series 600 & 700 connectors

- Solder dipped tails added to standard gold flash

Water Block

Consult API engineers for specifics.

- Internally sealed in accordance with NEMA Standard Rain Test section 6.4 (also UL50 part 28 ram test for submersion, section 6.10.1)

Threaded Inserts

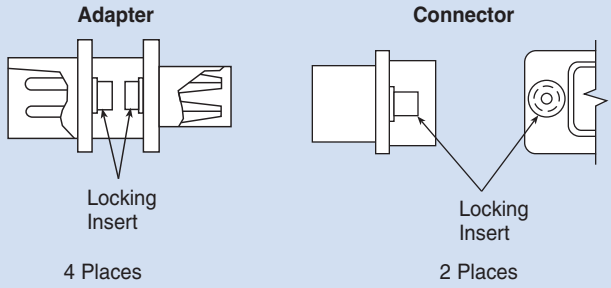

Grounding Brackets

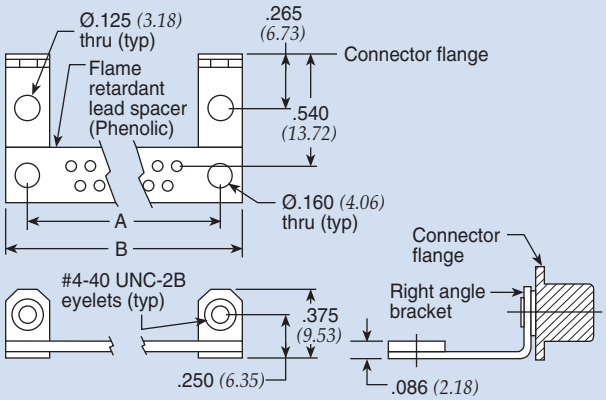

Size	A		B	
9	.984	(24.99)	1.214	(30.84)
15	1.312	(33.32)	1.542	(39.17)
25	1.852	(47.04)	2.088	(53.04)
37	2.500	(63.50)	2.730	(69.34)

Stand-off with Board Lock

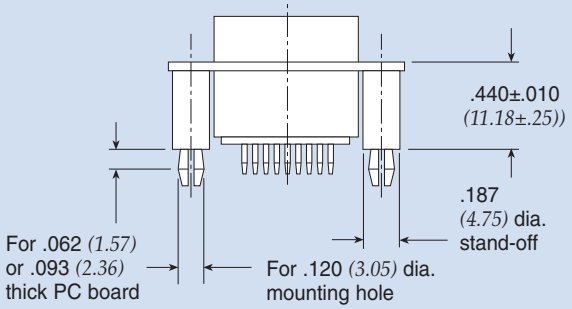

Grounding Bracket with Board Lock (see above for grounding bracket details)

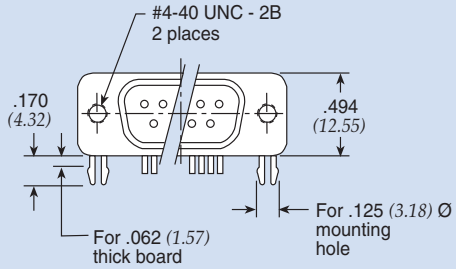

Dimensions in inches *(mm)*

api technologies corp.
Spectrum Control

Filtered Combo D-Subminiature Connectors

API's Spectrum Control line of filtered combo D-subs provide high insertion loss with capacitive filtering. These connectors are available with 20 Amp power contacts or 40 Amp power contacts. Configurations include male and female versions with straight PC terminals, right angle PC terminals or solder cup terminals. Standard D-sub shell sizes provide intermateability with unfiltered connectors. High strength epoxy potting protects ceramic elements.

Capacitive filtering is available in 470, 820, 1000 and 1500 pF. Additional capacitance ranges and configurations can be provided upon request. Please consult factory for more information.

Applications

- Telecommunications base station equipment
- Switching and transmission equipment
- Power supplies
- Industrial equipment
- Computer work stations

Mechanical Specifications

Shell . . . . . Steel, tin plated

Power Contacts . . . . . Brass, gold plated .000030 in. *(0.762 µm)* minimum

Signal Contacts . . . . . Pin: brass, gold plated .000015 in. *(0.762 µm)* min. Socket: copper alloy, gold plated .000030 in. *(0.762 µm)* min.

Insulator . . . . . Glass-filled polyester, flammability UL94V-0

Operating Temperature . . . . -55°C to +125°C

Capacitors . . . . . MLCC

Electrical Specifications

Operating Voltage . . . . . 200 VDC

*Current Rating** . . . . . 40 Amp power/ 5 Amp signal

Insulation Resistance . . . . . 1 Gohm at 100 VDC

Capacitance . . . . . See below for MLCC values. For other capacitance values contact factory.

Dielectric Withstanding Voltage . . . . . 600 VDC

***30 Amp available. Consult factory.**

Ordering Information

Example: **563A03W3101GBL9**

56 * 3 A 03W3 101 GBL9

A: Pin - PCB Power
B: Pin - Right Angle Power
C: Pin - Solder Cup Power
G: Socket - PCB Power
H: Socket - Right Angle Power
J: Socket - Solder Cup Power
N: Custom Combination

* Insert "F" for RoHS compliant

Contact Arrangement

03W3 = 3W3
05W5 = 5W5
09W4 = 9W4
24W7 = 24W7

Capacitance Value

MLCC
201 = 470 pF
202 = 820 pF
203 = 1000 pF
204 = 1500 pF

Options

See options descriptions on page FC43 add suffix ending

LI = 4-40 UNC inserts
LIM = Metric M3.0 self-locking threads
GB = Metal bracket provides ground connection, includes 4-40 self-locking threads (for right angle mount only)
GBL = Grounded board lock (right angle)
GBL6 = for .062" boards (straight PCB mount)
GBL9 = for .093" boards (straight PCB mount
50G = 50 µ *(1.27 µm)* gold plating
S = Solder dipped tails
JS = Jackscrew mounting

For option combinations, consult factory.

Filtered Combo D-Subminiature Connectors
3W3

Plug - Solder Cup

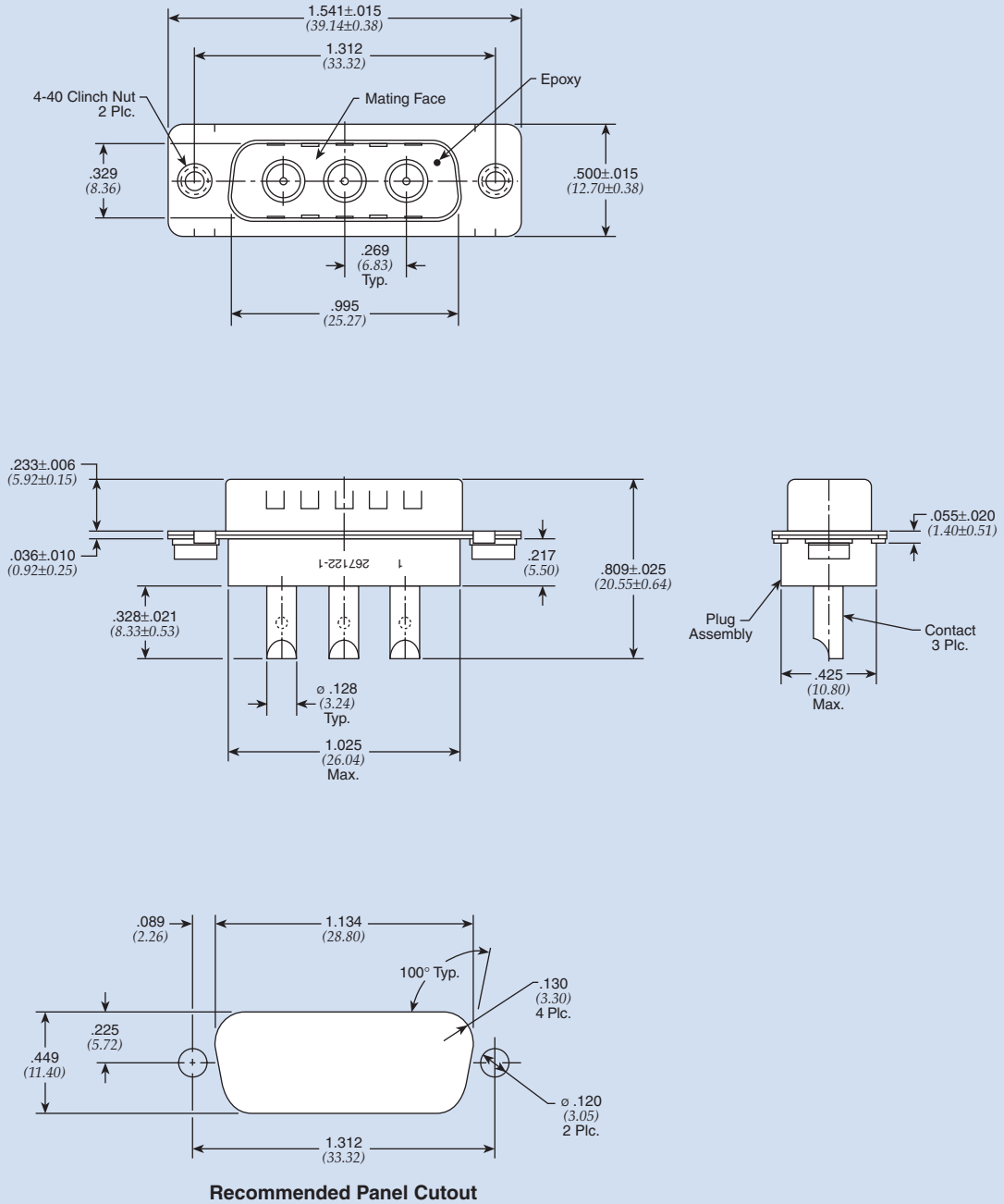

Recommended Panel Cutout

Only represents a few of our available configurations. Consult factory for more information.

Dimensions in inches *(mm)*

Filtered Combo D-Subminiature Connectors
3W3

Plug - Right Angle

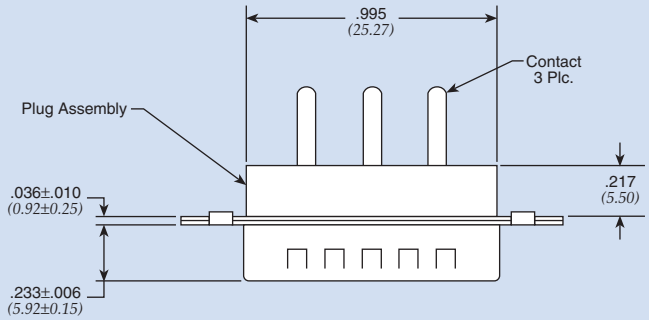

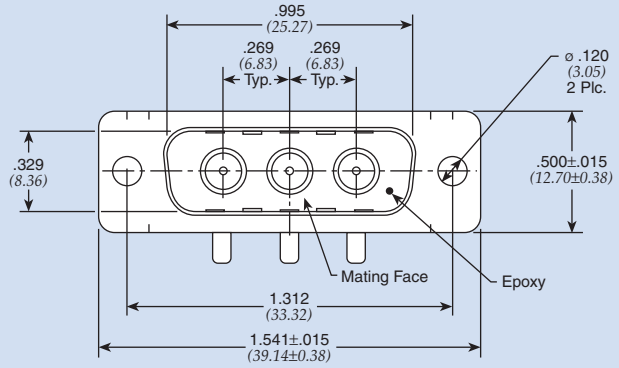

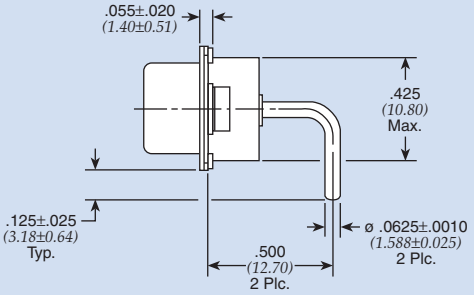

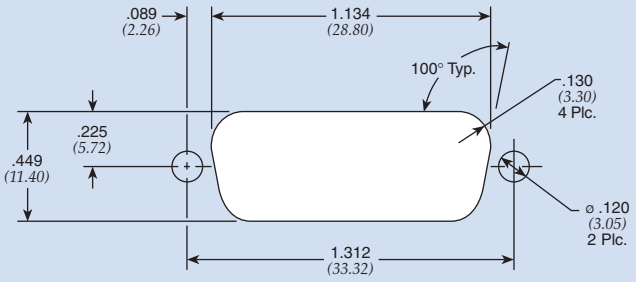

Recommended Panel Cutout

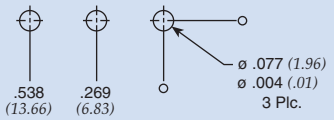

Only represents a few of our available configurations. Consult factory for more information.

Dimensions in inches *(mm)*

Filtered Combo D-Subminiature Connectors
5W5

Plug - Vertical

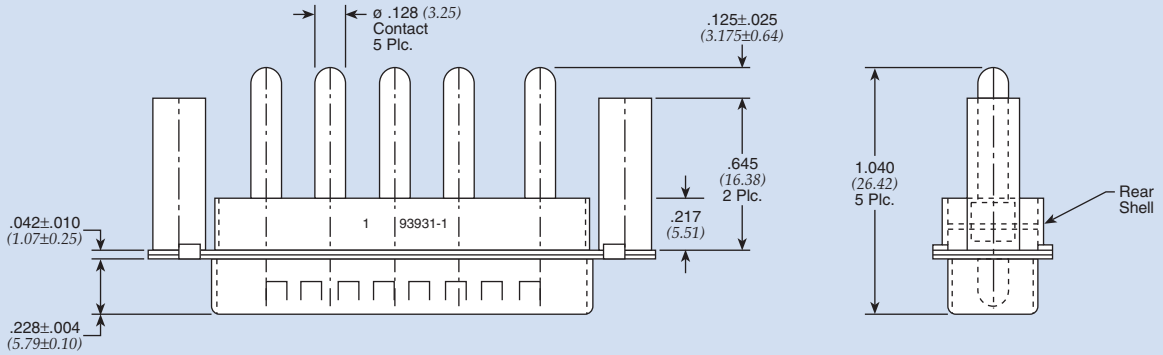

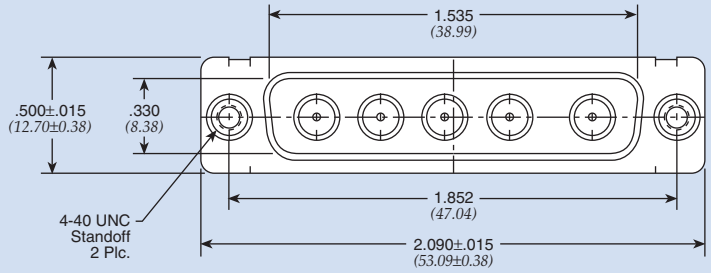

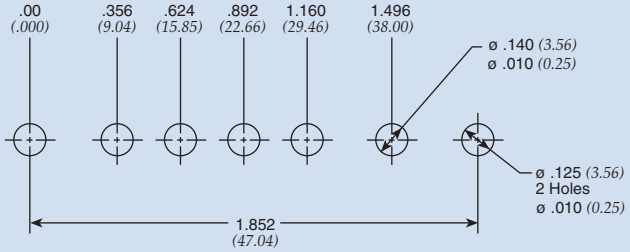

Recommended PCB Layout

Only represents a few of our available configurations. Consult factory for more information.

Dimensions in inches *(mm)*

Filtered Combo D-Subminiature Connectors
9W4

Socket - Solder Cup

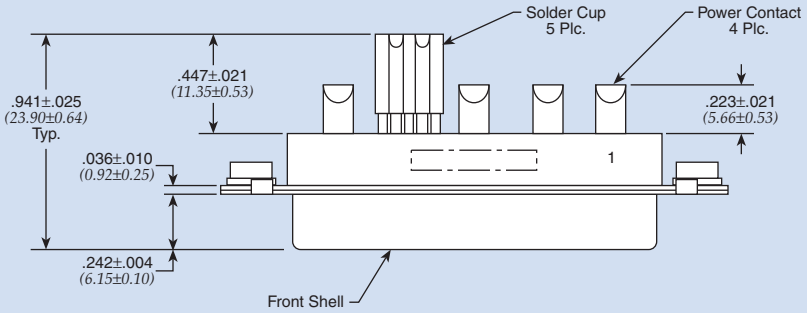

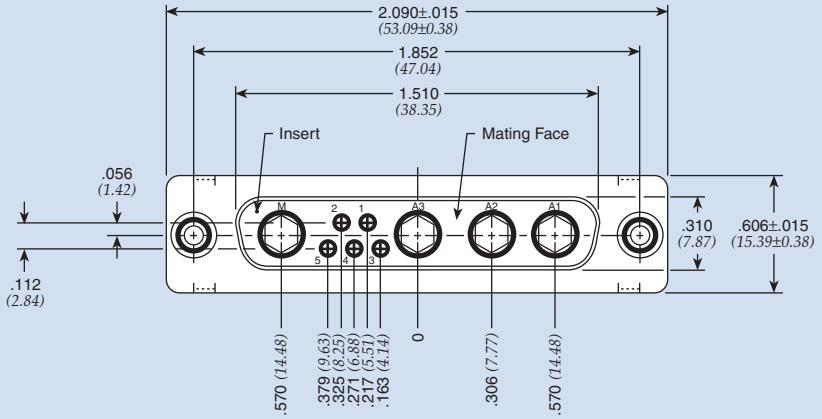

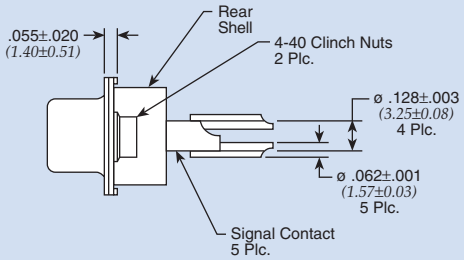

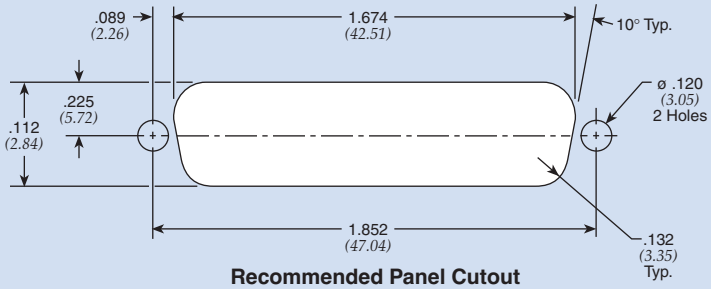

Recommended Panel Cutout

Only represents a few of our available configurations. Consult factory for more information.

Dimensions in inches *(mm)*

Filtered Combo D-Subminiature Connectors
9W4

Socket - Vertical

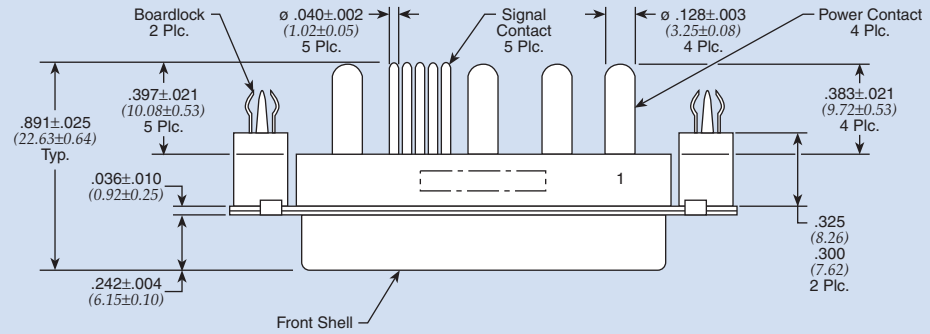

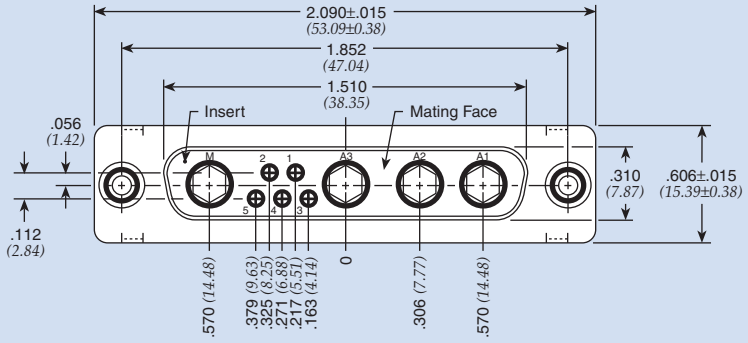

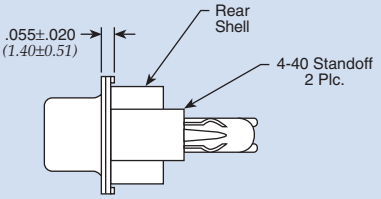

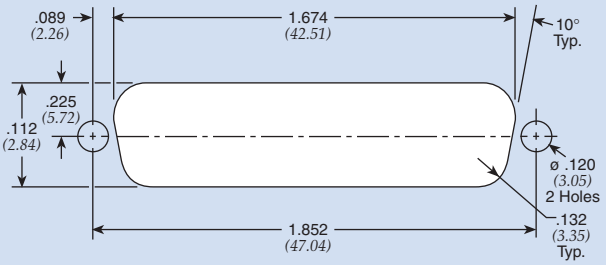

Recommended Panel Cutout

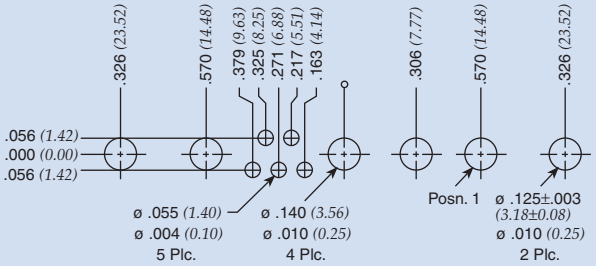

Recommended PC Board Mounting Dimensions

Only represents a few of our available configurations. Consult factory for more information.

Dimensions in inches *(mm)*

Filtered Combo D-Subminiature Connectors
9W4

Plug - Right Angle

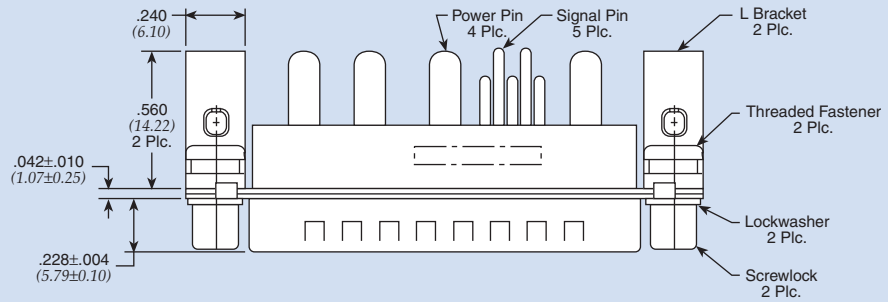

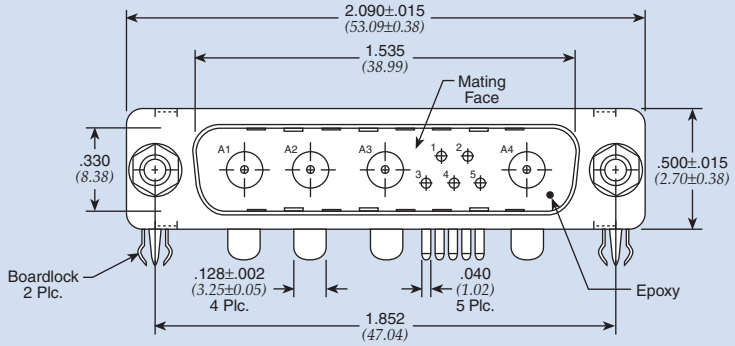

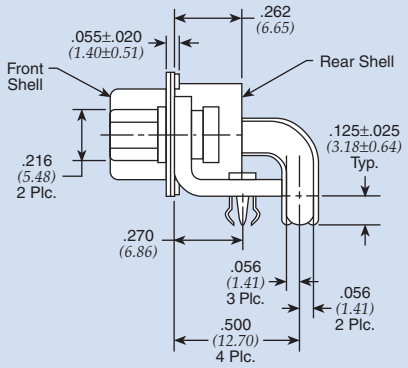

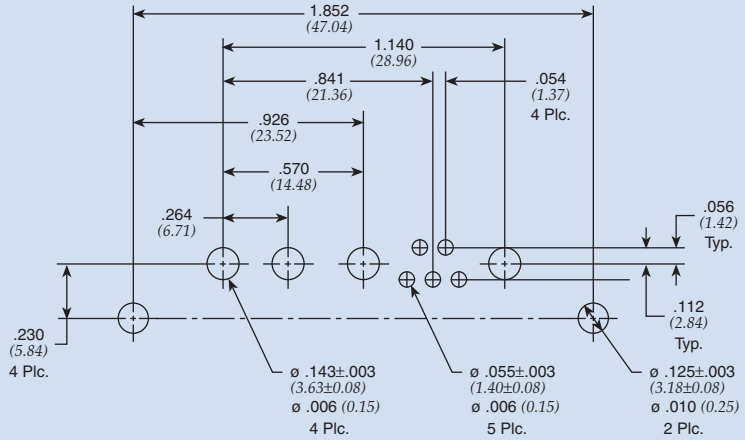

Recommended PC Board Mounting Dimensions

Only represents a few of our available configurations. Consult factory for more information.

Dimensions in inches *(mm)*

Filtered Combo D-Subminiature Connectors
24W7

Socket - Solder Cup

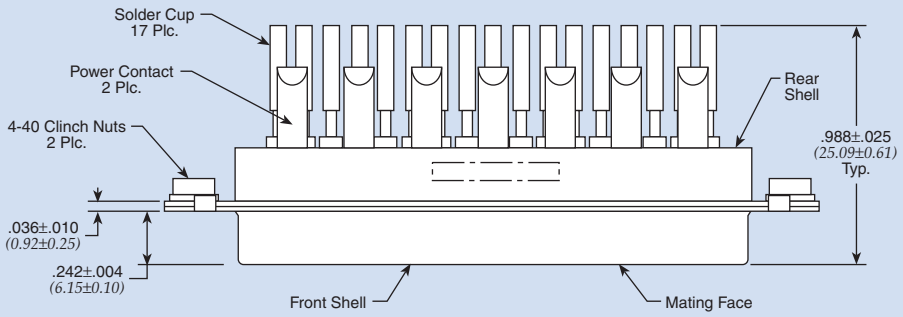

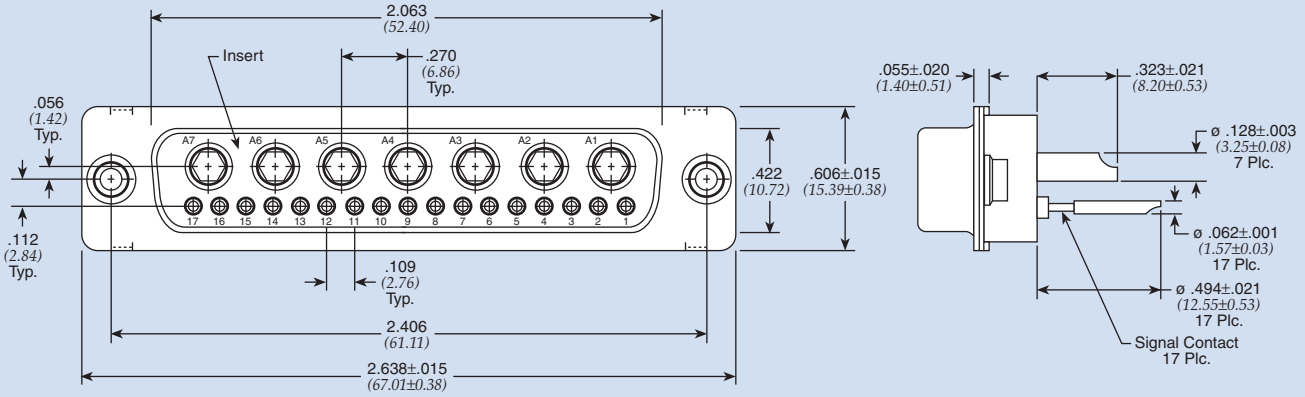

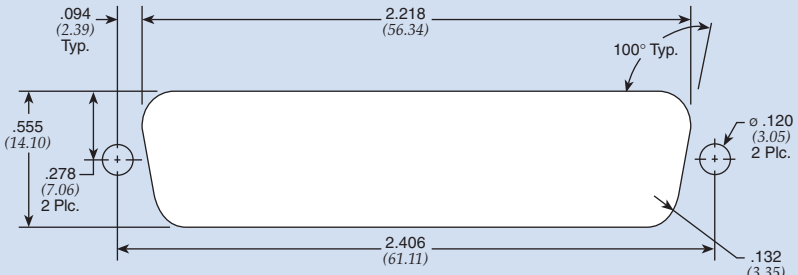

Recommended Panel Cutout

Only represents a few of our available configurations. Consult factory for more information.

Dimensions in inches *(mm)*

api technologies corp.
Spectrum Control

D-Subminiature Adapter Test Kit & Hardware

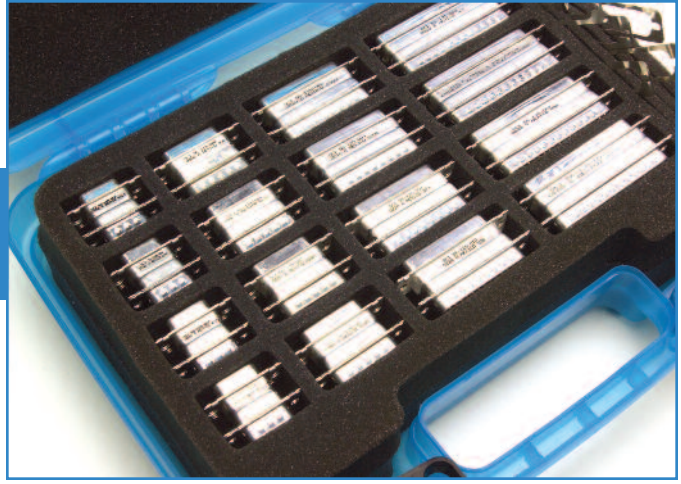

Adapter Test Kit

Adapter Test Kit

Specially designed for EMI evaluation process

- Male/female adapter part
- Easily plugged into equipment under testing conditions
- Ideal for new products and retrofitting
- Each adapter test kit includes:
  - 20 filtered adapters
  - Four shell sizes 9, 15, 25 and 37
  - Four filter ranges:

    Series 700

    - 310 pF Pi
    - 830 pF FT
    - 1000 pF Pi
    - 4000 pF Pi

Ordering Information

Description	API Part Number
Adapter test kit	56-700-002
Adapter test kit with Jackscrew *Includes 40 pcs. 56-201-006*	56-700-002-JS
Hexagonal Spacer	56-201-001 (1 per)
Jackscrew Mounting Hardware *For .312" (7.92 mm) length*	56-201-004 (1 per)
Jackscrew Mounting Hardware *For .688" (17.47 mm) length*	56-201-006 (2 per)
Tubular Spacer	56-201-003 (1 per)

Hardware

Designed to provide simple and effective mounting

Hexagonal Spacer

- Tapped spacer fits between flanges
- Provide retrofit of 4-40" threads
- Two spacers per adapter required, packaged in bulk

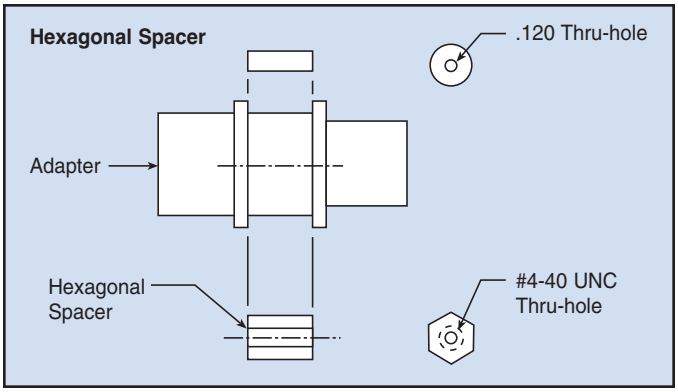

Jackscrew Mounting Hardware

- Male/female jackscrews
- Standard 4-40 threads for compatibility
- Two male thread lengths available
- Two screws per adapter required
- Lockwasher included, packaged in bulk

api technologies corp.
Spectrum Control

Micro D Series Filtered Connectors

For designs that require even smaller connector packages, API's Spectrum Control brand has designed a line of filtered Micro D-Subminiature connectors. This line of connectors offers a range of reliable filtering options, including capacitive and ESD versions, and several sizes and termination options. API has a Micro D-sub connector to satisfy your smallest space constraints.

Features

- Light weight
- Compact size
- Environmentally sealed contact area when mated
- Corrosion resistant
- Durable (500 cycles min.)
- Superior electrical performance
- RoHS compliant

Mechanical Specifications

Shell . . . . . Aluminum, electroless nickel plated 500 µ in (12.7 µm) minimum

Insulator . . . . . High temperature plastic, flammability UL94V-0

Contacts . . . . . Copper alloy, gold plated 50 µ in (1.27 µm) minimum

Potting . . . . . Flammability UL94V-0

Interfacial Seal . . . . . Silicon

Electrical Specifications

Operating Voltage . . . . . 100 VDC

Dielectric Withstanding Voltage . . . 300 VDC

Current Rating. . . . . 3 Amps

Insulation Resistance . . . 5G ohms @ 100 VDC

Ordering Information

Example: **56-F011-110-JP**

This part number represents a micro D-sub connector with a shell size of 15 and a pin to solder cup configuration. All lines are filtered with same capacitance value, which is 100 pF COB. The connector includes an optional #2-56 jack post.

56 **F** **0** **1** **1** - **1** **10** - **JP**

Filtered Connectors

RoHS Compliant

Micro D

Shell Size/ Number of Contacts

0 - 9 contacts
1 - 15 contacts
2 - 21 contacts
3 - 25 contacts
4 - 31 contacts
5 - 37 contacts

Contact Type/Termination

1 - Pin to solder cup
2 - Pin to right angle*
3 - Socket to PC tail*
4 - Socket to right angle*
6 - Socket to solder cup
7 - Pin to PC tail*
8 - Pin to pigtail
9 - Socket to pigtail

Line Filtering

1 - All positions same
2 - Select load

Capacitance Value/Type

High Performance
01 - 100 pF FT
02 - 470 pF FT
03 - 820 pF FT
04 - 1500 pF FT
05 - 4700 pF FT

Standard Performance
10 - 100 pF COB
11 - 470 pF COB
12 - 820 pF COB
13 - 1500 pF COB
14 - 4700 pF COB

Options
JP - #2-56 jack post
JS - #2-56 jackscrew
TI - Threaded insert
JT - Jack post and threaded insert
GB - Grounding Bracket

** Right angle and PC tail length is 0.109. Other lengths available, consult factory.*

All capacitance values ±20% @ 25°C

API TECHNOLOGIES • 8061 Avonia Rd. • Fairview, PA 16415 • Ph: 814-474-1571 • Fax: 814-474-3110 • eis.apitech.com
API TECHNOLOGIES' SPECTRUM CONTROL GmbH • Hansastrasse 6 • 91126 Schwabach, Germany • Phone: (49)-9122-795-0 • Fax: (49)-9122-795-58

api technologies corp.
Spectrum Control

Micro D Series Filtered Connectors

High Performance

Filter Designation	Type	Capacitance		Dielectric Withstanding Voltage	Working Voltage DC -55°C to +125°C	Minimum Insertion Loss - Decibels (dB) 50 ohm system per MIL-STD-220 (no load)							
		Value	Tolerance			5 MHz	10 MHz	20 MHz	50 MHz	100 MHz	200 MHz	500 MHz	1 GHz
01	FT	100 pF	±20%	300V	100V	—	—	—	—	1	6	14	20
02	FT	470 pF	±20%	300V	100V	—	—	2	8	14	20	28	34
03	FT	820 pF	±20%	300V	100V	—	2	6	13	19	25	33	39
04	FT	1500 pF	±20%	300V	100V	—	5	10	18	24	30	38	44
05	FT	4700 pF	±20%	300V	100V	8	14	20	28	34	40	48	54

Standard Performance

Filter Designation	Type	Capacitance		Dielectric Withstanding Voltage	Working Voltage DC -55°C to +125°C	Minimum Insertion Loss - Decibels (dB) 50 ohm system per MIL-STD-220 (no load)							
		Value	Tolerance			5 MHz	10 MHz	20 MHz	50 MHz	100 MHz	200 MHz	500 MHz	1 GHz
10	COB	100 pF	±20%	300V	100V	—	—	—	—	1	6	14	20
11	COB	470 pF	±20%	300V	100V	—	—	2	8	14	20	28	32
12	COB	820 pF	±20%	300V	100V	—	2	6	13	19	25	32	32
13	COB	1500 pF	±20%	300V	100V	—	5	10	18	24	30	32	32
14	COB	4700 pF	±20%	300V	100V	8	14	20	28	32	32	32	32

Right Angle PCB

Receptacle

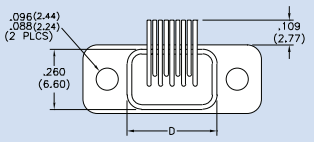

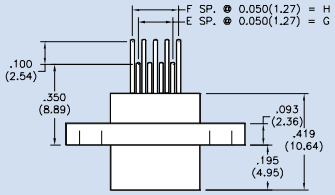

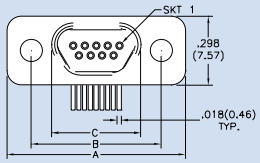

Plug

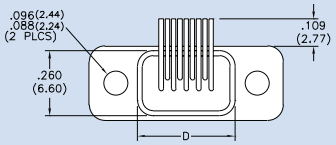

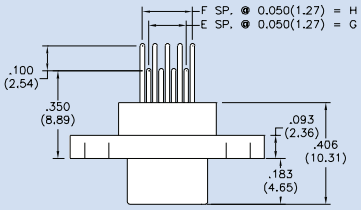

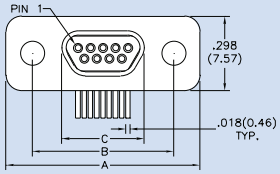

Size	A	B	C (RCPT)	C (Plug)	D	E	F	G	H
9	.775 *(19.69)*	.565 *(14.35)*	.388 *(9.86)*	.330 *(8.38)*	.390 *(9.91)*	4	5	.200 *(5.08)*	.250 *(6.35)*
15	.925 *(23.50)*	.715 *(18.16)*	.538 *(13.67)*	.480 *(12.19)*	.540 *(13.72)*	7	8	.350 *(8.89)*	.400 *(10.16)*
21	1.075 *(27.31)*	.865 *(21.97)*	.688 *(17.48)*	.630 *(16.00)*	.690 *(17.53)*	10	11	.500 *(12.70)*	.550 *(13.97)*
25	1.175 *(29.85)*	.965 *(24.51)*	.788 *(20.02)*	.730 *(18.54)*	.790 *(20.07)*	12	13	.600 *(15.24)*	.650 *(16.51)*
31	1.325 *(33.66)*	1.115 *(28.32)*	.938 *(23.83)*	.880 *(22.35)*	.940 *(23.88)*	15	16	.750 *(19.05)*	.800 *(20.32)*
37	1.475 *(37.47)*	1.265 *(32.13)*	1.088 *(27.64)*	1.030 *(26.16)*	.1.090 *(27.69)*	18	19	.900 *(22.86)*	.950 *(24.13)*

Dimensions in inches *(mm)*

api technologies corp.
Spectrum Control

Micro D Series Filtered Connectors

Size	A	B	C (RCPT)	C (Plug)	D
9	.775 *(19.69)*	.565 *(14.35)*	.388 *(9.86)*	.330 *(8.38)*	.390 *(9.91)*
15	.925 *(23.50)*	.715 *(18.16)*	.538 *(13.67)*	.480 *(12.19)*	.540 *(13.72)*
21	1.075 *(27.31)*	.865 *(21.97)*	.688 *(17.48)*	.630 *(16.00)*	.690 *(17.53)*
25	1.175 *(29.85)*	.965 *(24.51)*	.788 *(20.02)*	.730 *(18.54)*	.790 *(20.07)*
31	1.325 *(33.66)*	1.115 *(28.32)*	.938 *(23.83)*	.880 *(22.35)*	.940 *(23.88)*
37	1.475 *(37.47)*	1.265 *(32.13)*	1.088 *(27.64)*	1.030 *(26.16)*	.1.090 *(27.69)*

Dimensions in inches *(mm)*

Vertical PCB

Receptacle

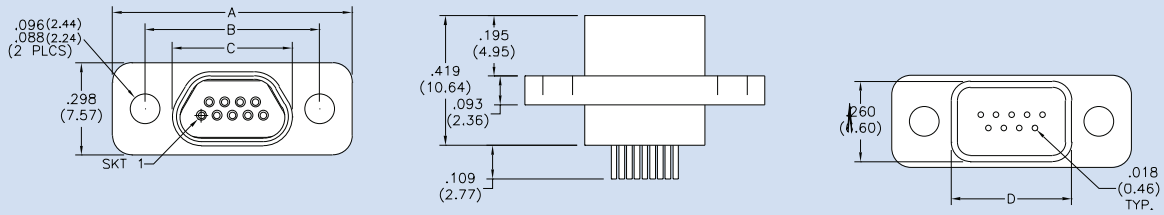

Plug

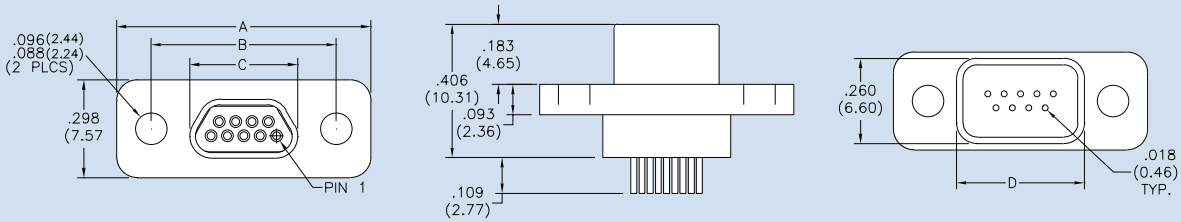

Solder Cup

Receptacle

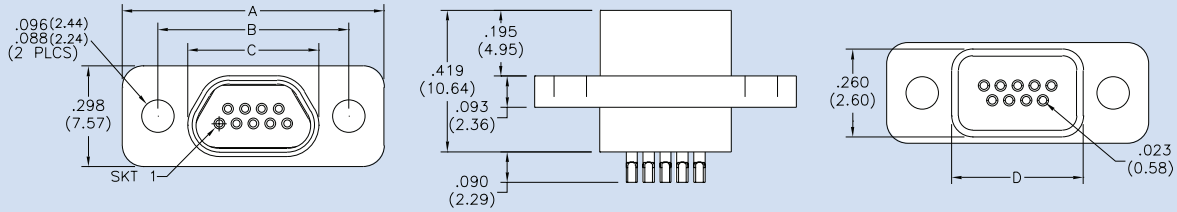

Plug

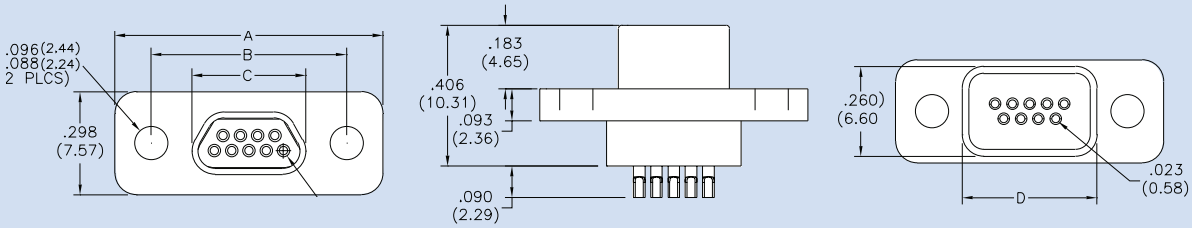

Micro D Series Filtered Connectors
Options

JP - #2-56 Jack Post M83513/05-07

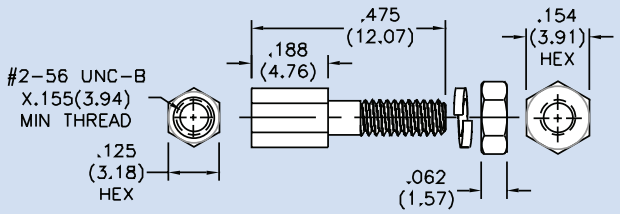

JS - #2-56 Jack Screw M83513/05-05

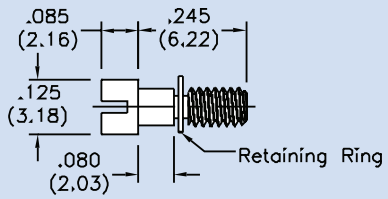

TI - Threaded Insert Receptacle

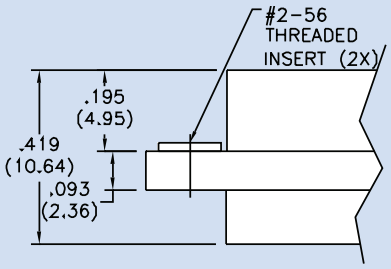

TI - Threaded Insert Plug

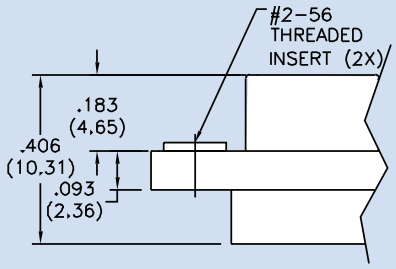

GB - Ground Bracket Receptacle

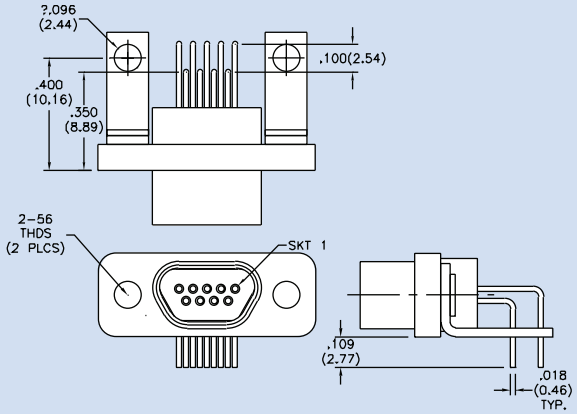

GB - Ground Bracket Plug

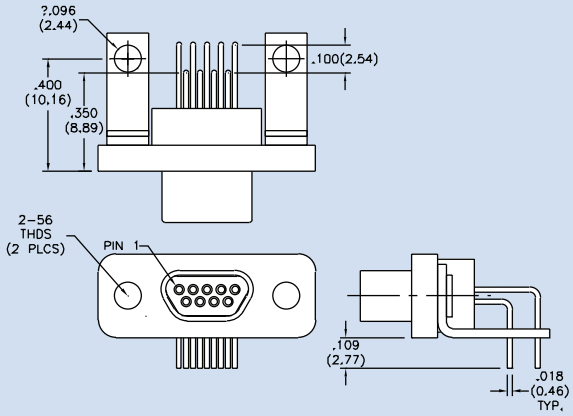

api technologies corp.
Spectrum Control

Micro D Series Filtered Connectors
Board and Panel Cutouts

Vertical PCB Layouts
Pin Connector Shown

9 Contacts

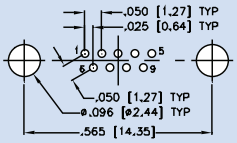

15 Contacts

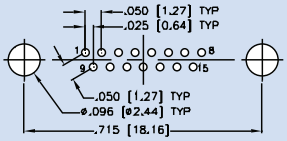

21 Contacts

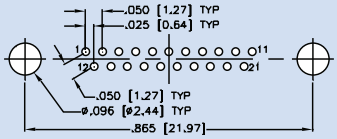

25 Contacts

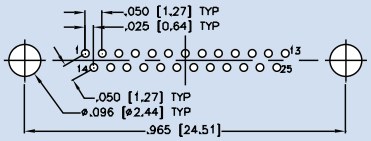

31 Contacts

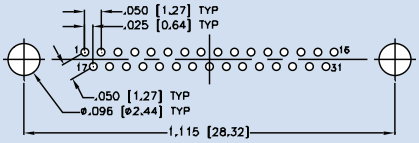

37 Contacts

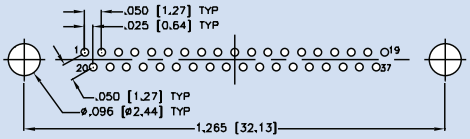

Right Angle PCB Layouts
Pin Connector Shown

9 Contacts

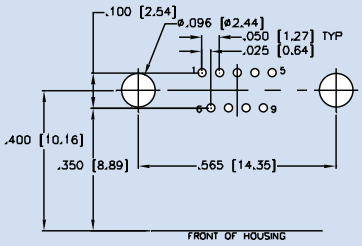

15 Contacts

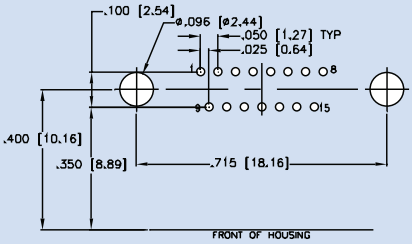

21 Contacts

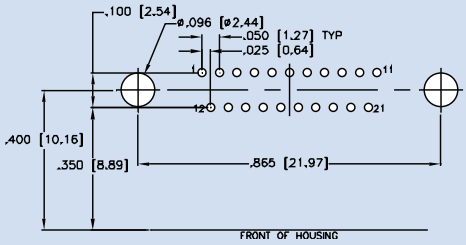

25 Contacts

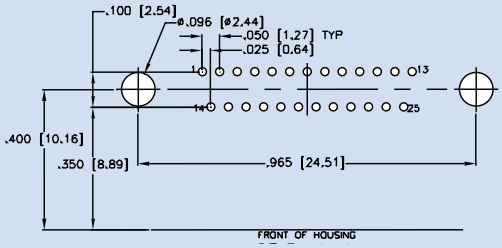

31 Contacts

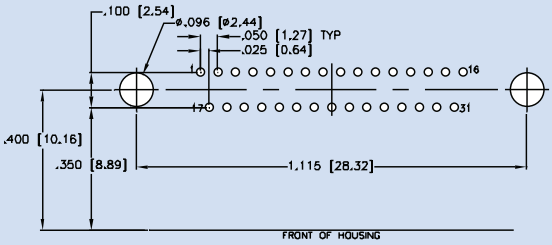

37 Contacts

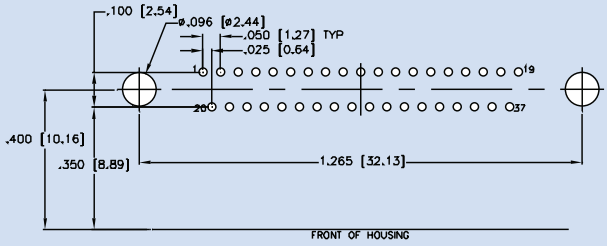

Notes: PC Tail Diameter 0.018 ±0.002 (0.46 ±0.05) Contact numbers shown are pin connector.
Reverse for socket. Patterns shown are for connector mounting side of PC board.

api technologies corp.
Spectrum Control

Filtered Miniature Ribbon Connectors

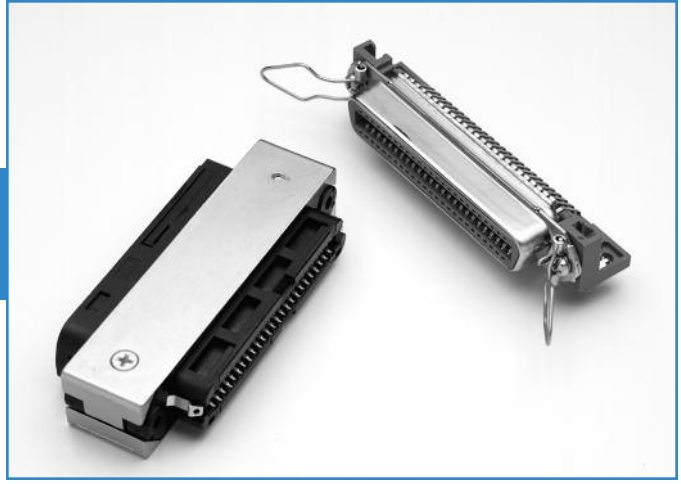

Filtered miniature ribbon connectors are fully intermateable and interchangeable with existing standard product. Rugged design construction and predictable capacitive filter performance is available in right-angle and male/female adapter versions.

Applications for this type of connector are widely diversified and include all phases of the telecommunications industry including original telephone manufacturing, operating telephone companies, cable reclamation, cable manufacturing and bay connectorization. The filtered miniature ribbon connector line is also ideally suited for use in printers, computer terminals, test equipment, business and copying machines, telemetering, and various equipment used in the security industry.

Features

- Lower installed cost
- Assists with FCC Part 15; available for Part 68 requirements
- Applicable for VDE specifications 0871, 0875-0878, Vfg Federal Regulations and VCCI noise requirements
- Drop-in replacement, matched footprint
- All circuit lines filtered
- Connector body is recognized under the Component Recognition Program of Underwriters Laboratories, Inc.
- Plastic components are UL94V-0 rated
- Connector body is certified by Canadian Standard Association

Mechanical Specifications - Adapter

Shell . . . . . Zinc

Thermoplastic Insert. . . . . Black, high strength

Contacts . . . . . Copper alloy

Contact Plating . . . . . 30uin (.76um) (min.) gold over nickel

Mechanical Specifications - Connector

Shell . . . . . Steel, tin plated

Thermoplastic Insert. . . . . Blue, 30% glass filled

Contacts . . . . . Phosphor bronze

Contact Plating . . . . . Gold flash (<10 µ in) over nickel

Typical Insertion Loss

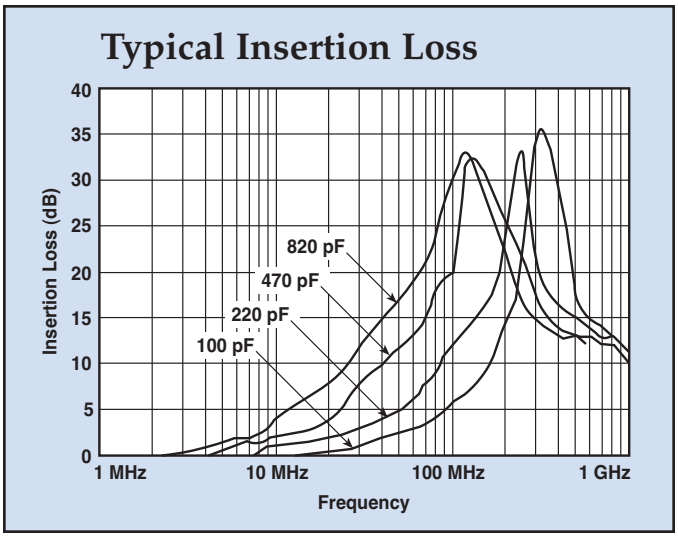

Electrical Specifications

Operating Temperature . . . . . -55°C - 105°C

Dielectric Withstanding Voltage . . . . . 1000 VAC min per (FCC Part 68 test)

Capacitance . . . . . 100 pF, 220 pF, 470 pF, 820 pF, ±15% (adapter), ±20% (connector)

Dissipation Factor . . . . . 2.5% max (adapter) 5% max (connector)

API TECHNOLOGIES • 8061 Avonia Rd. • Fairview, PA 16415 • Ph: 814-474-1571 • Fax: 814-474-3110 • eis.apitech.com
API TECHNOLOGIES' SPECTRUM CONTROL GmbH • Hansastrasse 6 • 91126 Schwabach, Germany • Phone: (49)-9122-795-0 • Fax: (49)-9122-795-58

api technologies corp.
Spectrum Control

Filtered Miniature Ribbon Connectors
50 Position

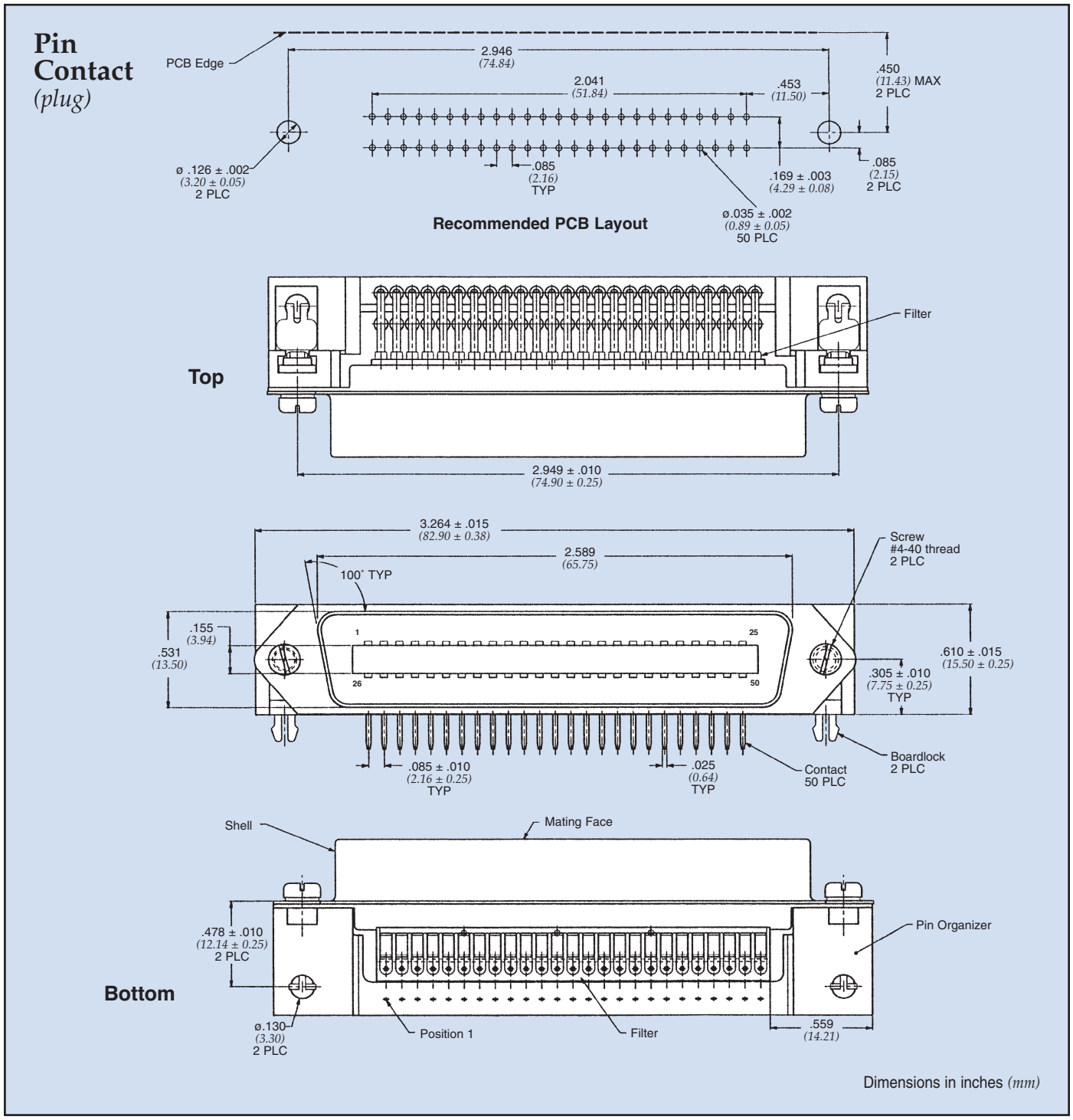

Part Number	Capacitance Value
56-882-002	100 pF, ±20%
56-882-003	220 pF, ±20%
56-882-004	470 pF, ±20%
56-882-005	820 pF, ±20%

api technologies corp.
Spectrum Control

Filtered Miniature Ribbon Connectors
50 Position

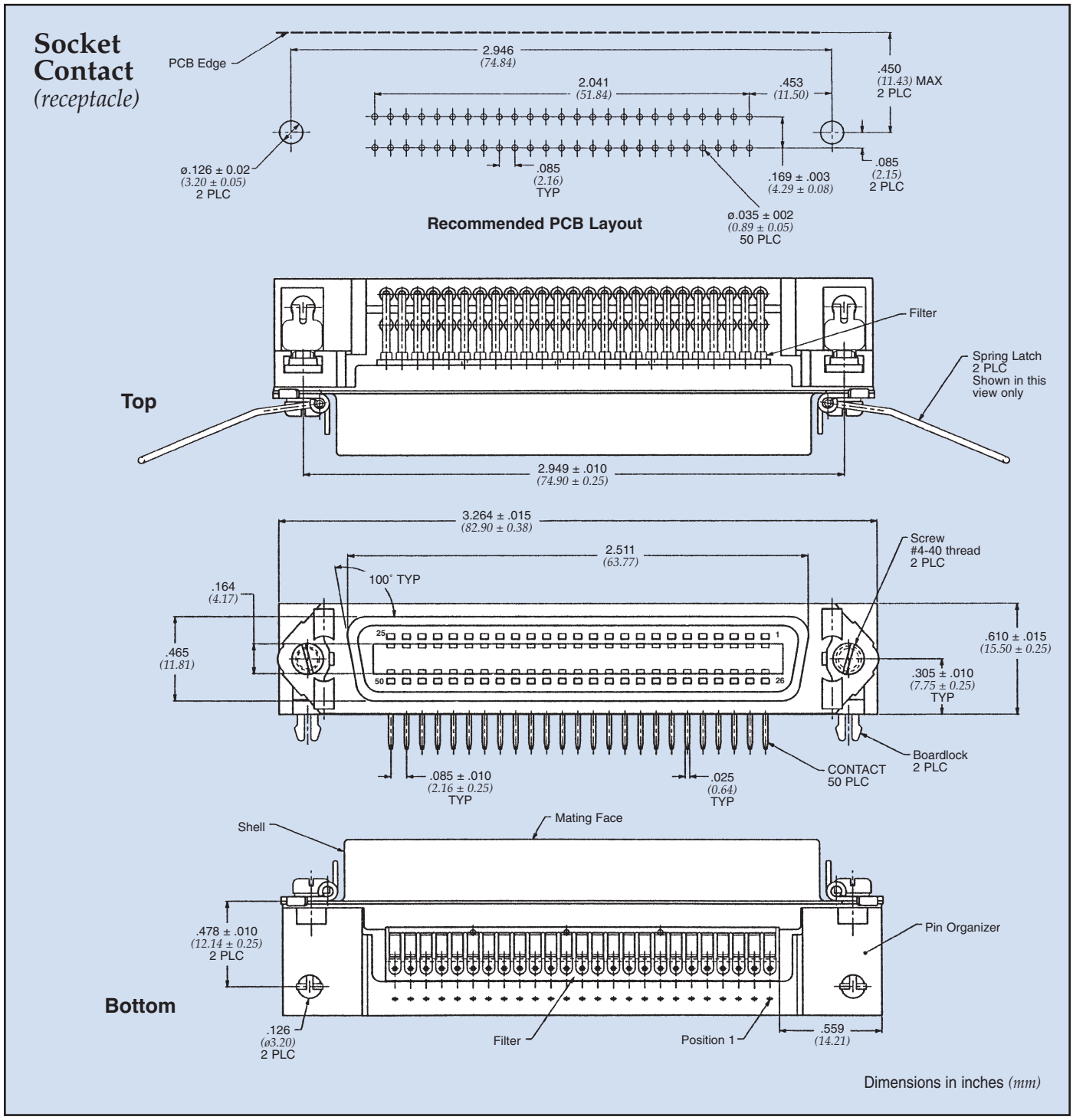

Part Number	Capacitance Value
56-886-002	100 pF, ±20%
56-886-003	220 pF, ±20%
56-886-004	470 pF, ±20%
56-886-005	820 pF, ±20%

Filtered Miniature Ribbon Connectors
50 Position

Adapter

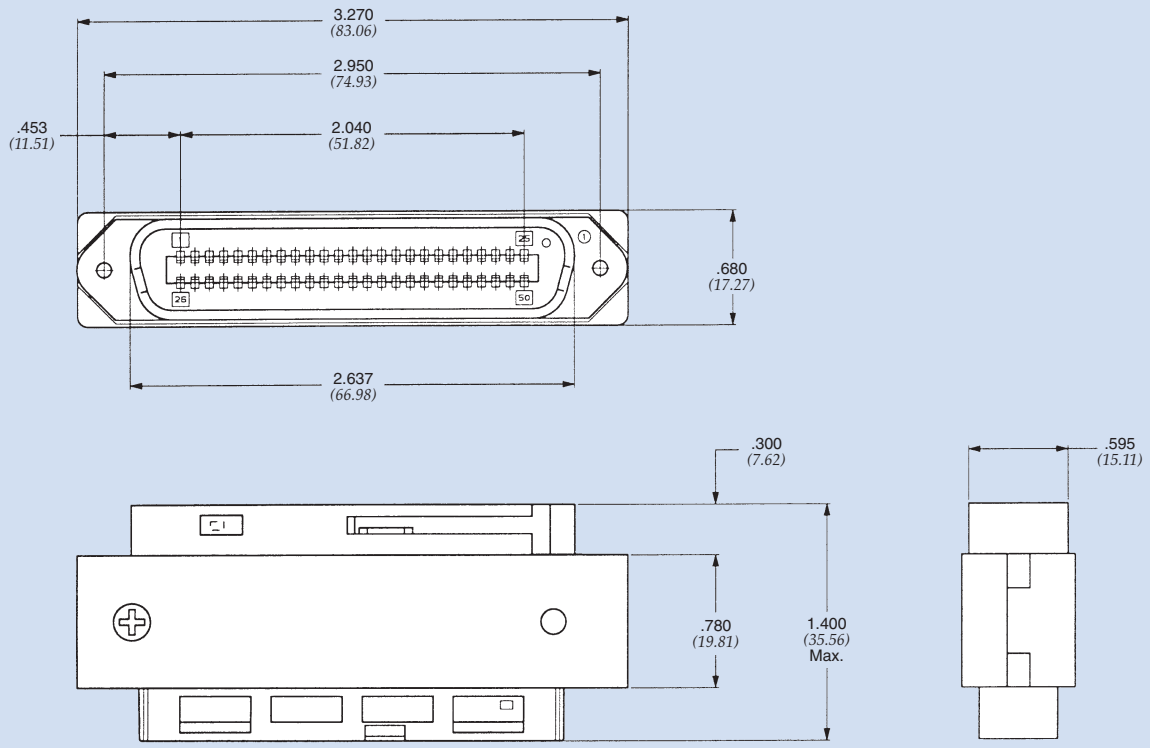

Dimensions in inches *(mm)*

Part Number	Capacitance Value
56-889-002	100 pF ±15%
56-889-003	220 pF ±15%
56-889-004	470 pF ±15%
56-889-005	820 pF ±15%

Hardware options also available. Consult factory for more information.

api technologies corp.
Spectrum Control

Hooded Strain Reliefs

Hooded strain reliefs are used whenever a connector is used on a cable assembly which will be exposed to users and subject to multiple disconnects. Hoods are designed to protect users from shock hazard by exposed solder joints, as well as provide a strain relief for the wires and protection against accidental short circuits.

Since most filter connectors are larger than standard connectors, there had been a problem fitting most commercially available hoods. Spectrum Control solves this problem. Our hoods are molded of thin wall plastic, providing extra internal space to accommodate larger filter connectors. The hood is constructed of extremely durable polycarbonate and meets the flammability requirements for UL94V-0.

In addition, hoods are ideal for use on applications which require the use of extra components such as resistors or varistors on the wires. The nonconductive hood conveniently houses the connector, components, and protects any joints.

- **2560-9000-XX** is supplied with metal retention clips to hold the connector within the hood assembly. This item is recommended for use with Spectrum Filtered D-subs, most other filtered D-subs, and most standard D-subs.
- **2560-9001-XX** is meant to be used with a connector which has a special eyelet on the mounting flange. This feature is available as an option on the Spectrum Filtered D-sub. Contact factory for additional information.

#2560-9000-XX

Retention Clip Version
(For use with most connectors)

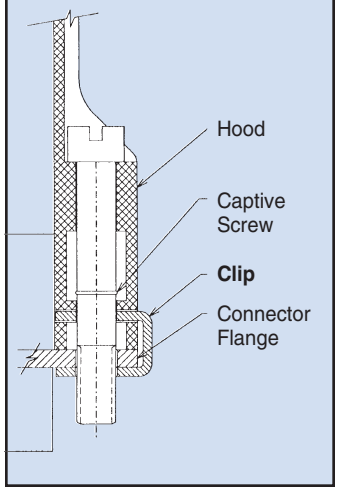

#2560-9001-XX

"Eyelet"
(For use with "Eyelet" connectors)

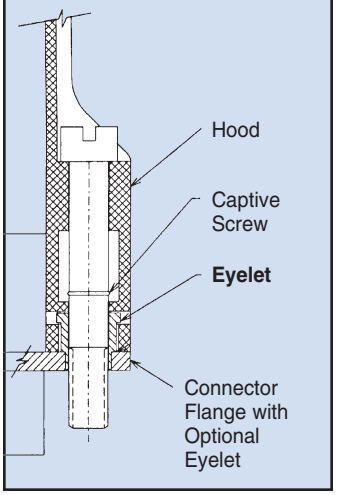

Ordering Information and Dimensions

Part Number	Con-nector Size	A ±.005	B Max	C Max	D Max	E Max	F Max
2560-9000-01 **2560-9001-01**	9	0.984 *(24.99)*	1.228 *(31.19)*	1.710 *(43.43)*	0.985 *(25.02)*	.685 *(17.40)*	.240 *(6.07)*
2560-9000-02 **2560-9001-02**	15	1.312 *(33.33)*	1.556 *(39.52)*	1.710 *(43.43)*	1.310 *(26.71)*	.685 *(17.40)*	.300 *(7.62)*
2560-9000-03 **2560-9001-03**	25	1.852 *(47.04)*	2.103 *(53.42)*	1.710 *(43.43)*	1.850 *(46.99)*	.685 *(17.40)*	.400 *(10.16)*
2560-9000-04 **2560-9001-04**	37	2.500 *(63.50)*	2.744 *(69.70)*	1.710 *(43.43)*	2.500 *(63.50)*	.685 *(17.40)*	.400 *(10.16)*

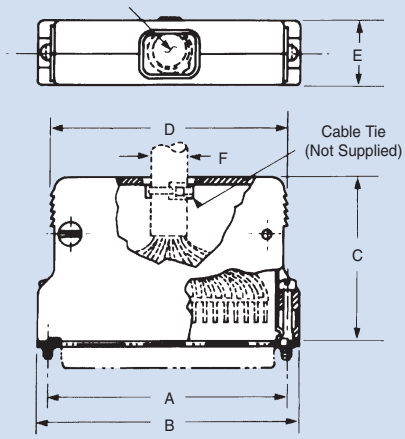

Dimensions in inches *(mm)*

api technologies corp.
Spectrum Control

Custom Engineered Solutions

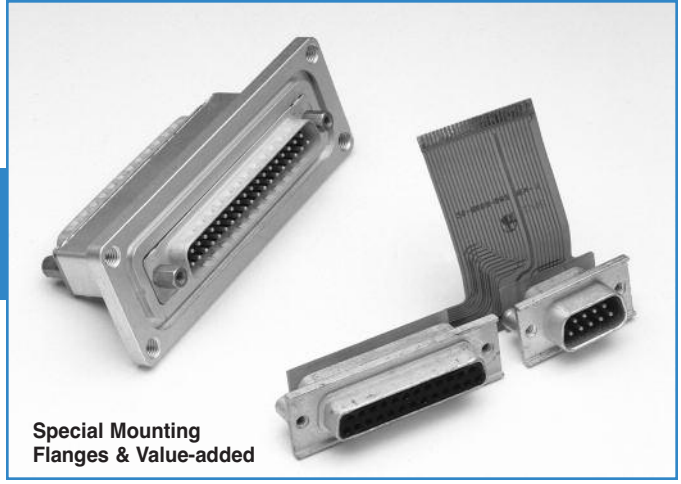
Special Mounting Flanges & Value-added

Despite the breadth of our filtered connector product line, there exist certain applications which demand a custom EMC solution. Our engineering staff will work with your design team to provide a custom filtered connector which meets your individual requirements. Examples of custom projects are shown below.

Special Mounting Flanges

- Housings can be designed to be integrated into the customer's equipment. The housings are constructed of machined materials, or precision diecast zinc.

Value-added Assemblies

- API's capabilities extend beyond just supplying filter connectors. Additional operations such as sourcing and assembling flexible circuits, adding flying leads, or making connector to connector assemblies, all can be provided in conjunction with the filter connector.

Custom Filter Arrangements

- Complex filters involving unbalanced Pi types, LC types with large inductive components, special pin-in to pin-out translations, and overvoltage protective devices such as diodes and varistors can be packaged within the connector.

Other Connector Formats

- Manufacturer specific connectors also can be filtered. Our involvement ranges from complete design to implementing minor modifications to include the addition of the filter components. Medical equipment and hand-held devices are examples of excellent applications for these connectors.

Custom Filter Arrangements & Connectors

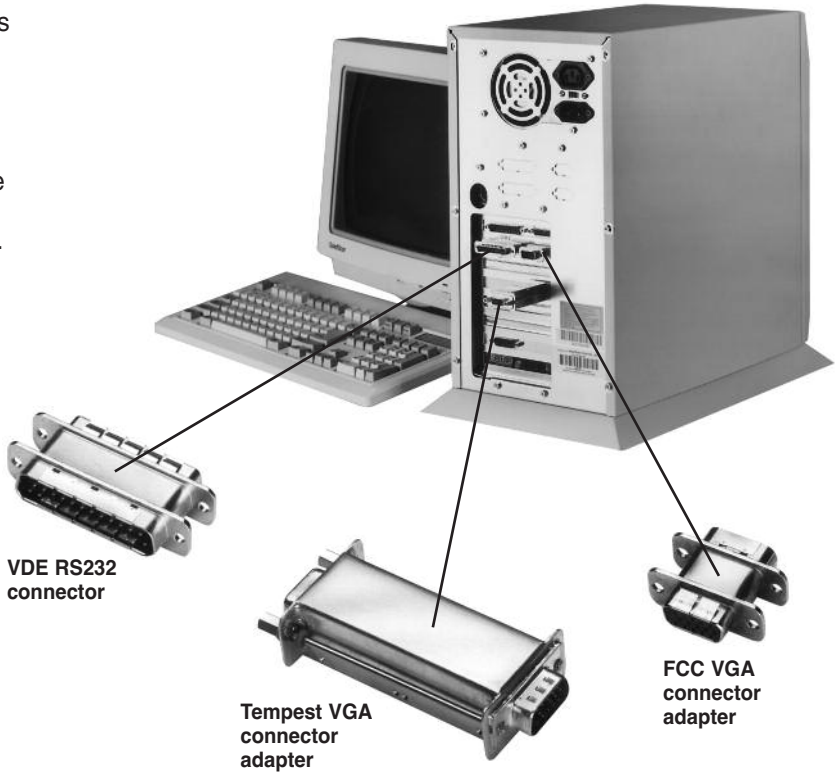

API TECHNOLOGIES • 8061 Avonia Rd. • Fairview, PA 16415 • Ph: 814-474-1571 • Fax: 814-474-3110 • eis.apitech.com
API TECHNOLOGIES' SPECTRUM CONTROL GmbH • Hansastrasse 6 • 91126 Schwabach, Germany • Phone: (49)-9122-795-0 • Fax: (49)-9122-795-58

api technologies corp.
Spectrum Control

Filtered Connector Performance Specifications

The filtered D-subminiature connectors shown in this catalog have been designed and tested to the following test plan.

The information shown can be used as a basis for your filtered connector specifications. (Contact API for additional details.)

Test Group	Order of Test	Examination of Test	Test Method	Post Test Requirements
I	1	Visual and Mechanical Examination		In accordance with applicable requirements.
	2	Materials, Designs Construction and Workmanship		
	3	Physical Dimensions and Marking		
	4	Capacitance	MIL-STD-202 Method 305 1 KHz, 1VRMS max. 25°C	WIthin specified tolerance.
	5	Dielectric Withstanding Voltage	MIL-STD-202 Method 301	No breakdown or damage.
	6	Insulation Resistance	MIL-STD-202 Method 302, test condition at rated voltage	5000 megohm minimum.
	7	Insertion Loss	MIL-STD-220 No load	In accordance with applicable requirements.
II	1	Contact Engagement and Separation	MIL-C-24308, Para. 3.5.10	Maximum engagement force 18.0 oz., minimum separation force 0.7 oz.
	2	Mating and Unmating Force	MIL-C-24308, Para. 3.5.4	MIL-C-24308, Para. 3.5.4 Table II Limits: Shell size 1-5, class G only.
	3	Durability	MIL-C-24308, Para. 3.5.16, 4.7.18, except 100 cycles	MIL-C-24308, Para. 3.5.9 Contact resistance at 1 amp. 20 millohms max.
	4	Thermal Shock	MIL-STD-202 Method 107, Test condition B, -55°C to +125°C	No evidence of damage. Insulation resistance not less than 2500 megohms.
	5	Solderability	MIL-STD-202; Method 208, RMA-Flux	Terminals shall meet solderability requirements.
	6	Moisture Resistance	MIL-STD-202 Method 106, less step seven	Insulation resistance not less than 500 megohms. Meet dielectric withstanding voltage requirements.
	7	Resistance to Soldering Heat	MIL-STD-202 Method 210, Test condition D	Insulation resistance not less than 500 megohms. Meet dielectric withstanding voltage requirements.
III	1	Vibration	MIL-STD-202 Method 204, Test condition D, 100 mA, current	No interruption of current flow longer than 1 microsecond. Insulation resistance greater than 5000 megohms.
	2	Shock	MIL-STD-202 Method 213. Test Condition G, 100 mA, current	No interruptions of current flow longer than 1 microsecond.
				Contact resistance at 1 amp. 15 millohms max.
				Capacitance within specified limits.
				Insulation resistance greater than 2500 megohms.
	3	Mounting Inserts a. Prevailing torque (locking) b. Installation torque (locking) c. Push-out Force	IFI-100	a. 3 inch-pounds max. b. 6 inch-pounds without damage c. 10 pounds axial force without loosening insert
IV	1	Life	MIL-STD-202 Method 108, Test condition D, within 125% of rated voltage at the maximum operating temperature.	Filter shall meet all initial requirements except insulation resistance shall not be less than 500 megohms.

Board & Panel Cutouts

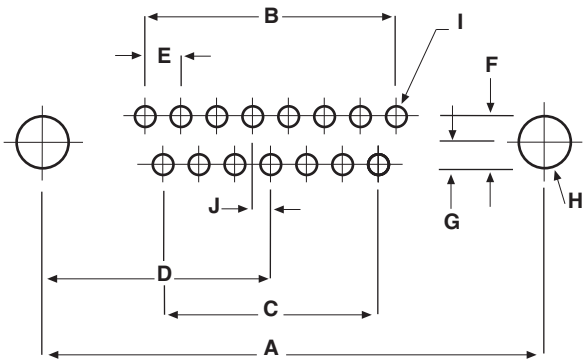

Printed Circuit
Vertical Board Mount (standard density)

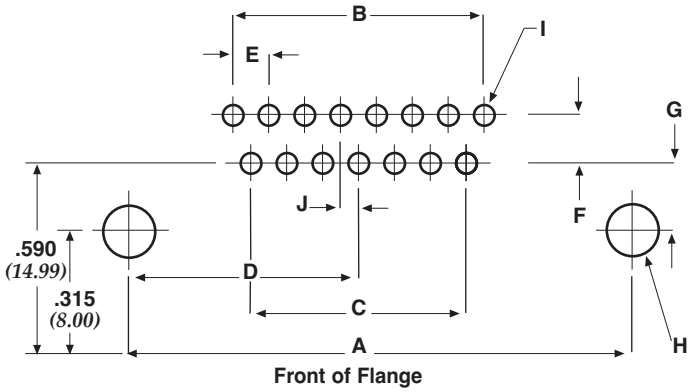

Printed Circuit
Right Angle Mount (standard density)

Board Layout (Pin and Socket Contact) for Standard D-Sub Connectors

Shell Size	A	B	C	D	E	F	G	H	I (Dia.)	J
9 (0)	.984 *(25.00)*	.436 = 4 x .109 *(11.07) (2.77)*	.327 = 3 x .109 *(8.31) (2.77)*	.492 *(12.50)*			PCB Mount .056 *(1.42)*			
15 (1)	1.312 *(33.32)*	.763 = 7 x .109 *(19.38) (2.77)*	.654 = 6 x .109 *(16.61) (2.77)*	.656 *(16.66)*			PCB Mount Rt Angle .275 *(6.99)*			
25 (2)	1.852 *(47.04)*	1.308 = 12 x .109 *(33.22) (2.77)*	1.199 = 11 x .109 *(30.45) (2.77)*	.926 *(23.52)*	.109 *(2.77)*	.112 *(2.84)*		.125 *(3.18)*	.045 *(1.14)*	.054 *(1.37)*
37 (3)	2.500 *(63.50)*	1.962 = 18 x .109 *(49.83) (2.77)*	1.853 = 17 x .109 *(47.07) (2.77)*	1.250 *(31.75)*			0.112 2 rows			
50 (4)	2.406 *(61.11)*	1.744 = 16 x .109 *(44.30) (2.77)* 2 rows	1.635 = 15 x .109 *(41.35) (2.77)* 1 row	1.203 *(30.56)*			0.00 1 row			

Panel Cutouts (Front or Rear Mounting) for Standard and High-Density D-Sub Connectors

Shell Size	A ±.015 *(.38)*	B ±.015 *(.38)*	C ±.015 *(.38)*	D ±.015 *(.38)*	E ±.003 *(.08)*	F ±.005 *(.13)*	G ±.002 *(.05)*
9 (0)	.984 *(24.99)*	.492 *(12.49)*	.777 *(19.74)*	.388 *(9.87)*	.440 *(11.18)*	.220 *(5.59)*	.150 *(3.81)*
15 (1)	1.312 *(33.32)*	.656 *(16.66)*	1.105 *(28.07)*	.552 *(14.03)*	.440 *(11.18)*	.220 *(5.59)*	.150 *(3.81)*
25 (2)	1.852 *(47.04)*	.926 *(23.52)*	1.645 *(41.78)*	.822 *(20.89)*	.440 *(11.18)*	.220 *(5.59)*	.150 *(3.81)*
37 (3)	2.500 *(63.50)*	1.250 *(31.75)*	2.293 *(58.24)*	1.146 *(29.12)*	.440 *(11.18)*	.220 *(5.59)*	.150 *(3.81)*
50 (4)	2.406 *(61.11)*	1.203 *(30.55)*	2.190 *(55.63)*	1.095 *(27.81)*	.550 *(13.97)*	.275 *(6.98)*	.150 *(3.81)*

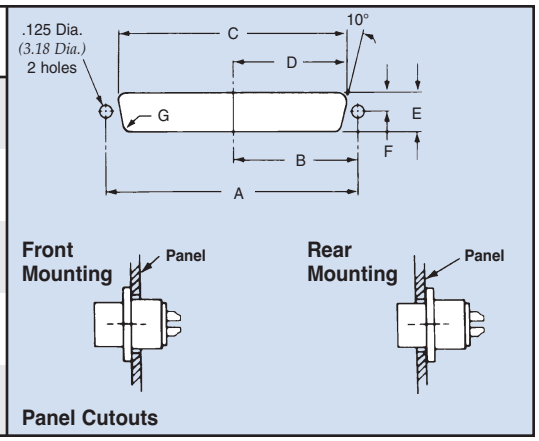

Dimensions in inches *(mm)*

Board & Panel Cutouts

15 High-Density Pin/PCB

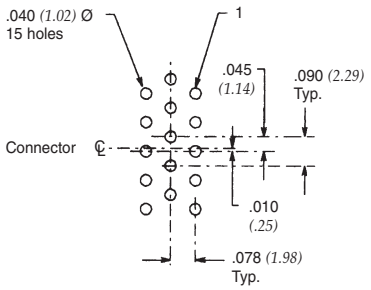

15 High-Density Socket/Right Angle

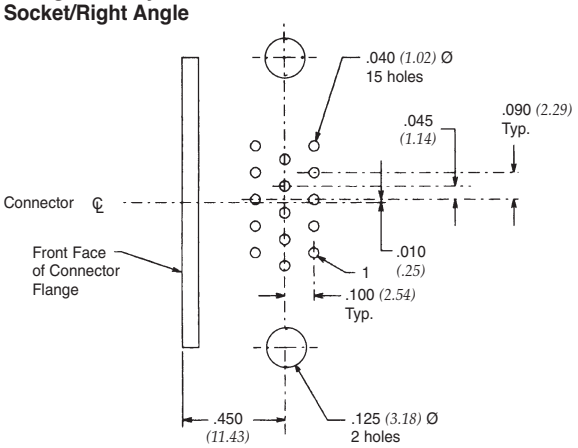

26 High-Density Pin/PCB

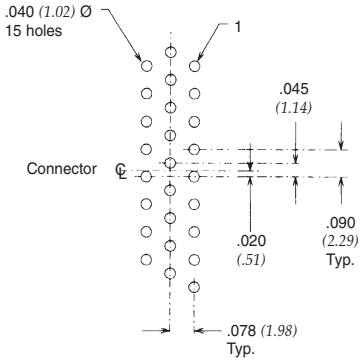

26 High-Density Socket/PCB

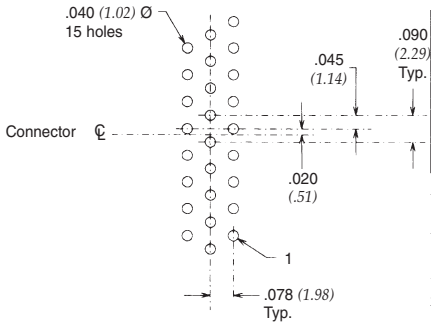

44 High-Density Pin/PCB

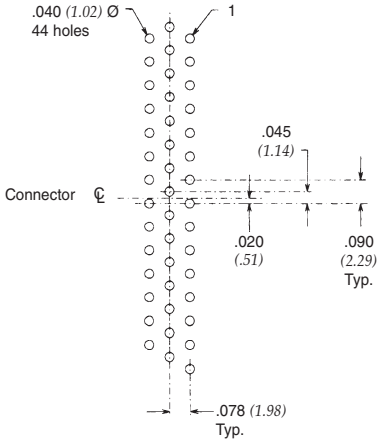

44 High-Density Socket/PCB

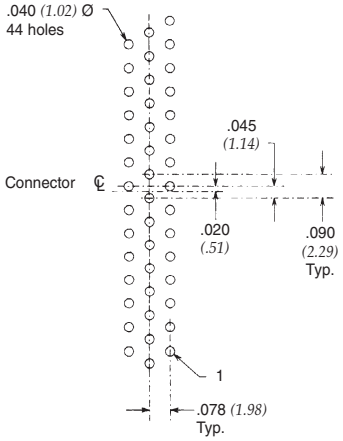

62 High-Density Pin/PCB

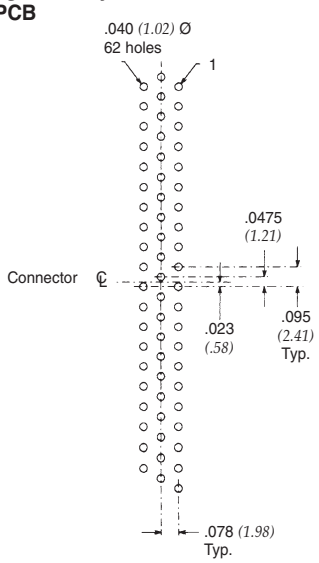

62 High-Density Socket/PCB

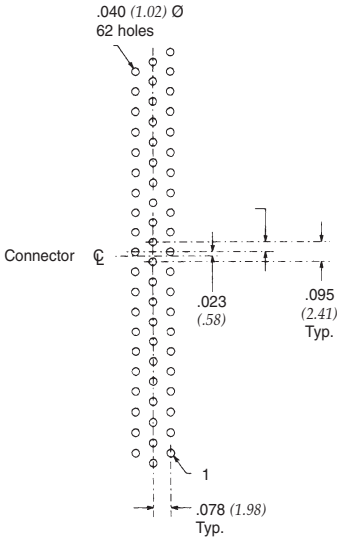

78 High-Density Socket/PCB Pin/PCB

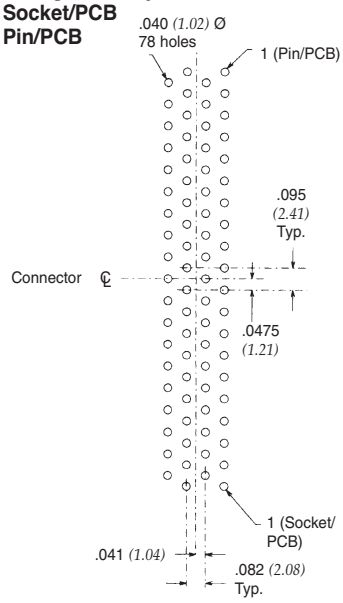

Dimensions in inches *(mm)*